RECOGNIZED COMPONENT
Constructional Data Report (CDR)

1.0 Reference and Address					
Report Number	130801751SHA-001	Original Issued:	24-Oct-2013	Revised:	None
Standard(s)	Medical electrical equipment, Part 1: General requirements for basic safety and essential performance (ANSI/AAMI ES60601-1 Issued: 2006/03/09: 2005 Version (R2012); with AMD C1: 2009, AMD C2: 2010 & CAN/CSA-C22.2 No.60601-1 Issued: 2008/02/01; with COR 2: 2011/06/01); Medical electrical equipment, Part 1-11: General requirements for basic safety and essential performance - Collateral Standard: Requirements for medical electrical equipment and medical electrical systems used in the home healthcare environment (ANSI/AAMI HA60601-1-11 Issue:2011/12/12 Ed:1).				

Applicant	GlobTek, Inc.	Manufacturer	**GlobTek (Suzhou) Co., Ltd.**
Address	186 Veterans Dr. Northvale, NJ 07647 USA	Address	Building 4. No 76 JinLing East Road, Suzhou Industrial Park, Suzhou, JiangSu, 215021
Country	USA	Country	China
Contact	Hans Moritz	Contact	Demon Zhou
Phone	(201)784-1000 Ext.253	Phone	86 512 6279 0301 Ext.189
FAX	(201)784-0111	FAX	86 512 6279 0355
Email	Moritzh@globtek.com	Email	demon.zhou@globtek.cn

2.0 Product Description	
Product	Medical Power Supply
Brand name	GlobTek
Description	Products covered by this report are medical power supply module, which can be used as part of medical equipment. The different models are corresponding to two structure types respectively. One type is power adapter, which can be used with detachable power supply cord. Different appliance inlets can be interchangeable on the device, which can provide earthing connection or not. Protective earthing connection to secondary circuit by internal wiring is optional, so it can be Class I or Class II construction. Both two constructions were in consideration in this report. But only Class II adapter models are evaluated by 60601-1-11. Two pieces of outer enclosure are enclosed with ultrasonic welding and screws. The other type is open-frame power supply board, which is the same as adapter model except input and output terminals and traces on the board. The installation and use for the insulation construction shall be finally determined in the end product. All the types are designed for continuous operation and no applied part is defined. The insulation construction of EUT is evaluated as 2MOPP in this report as customer's request.
Models	GT*41133-***-** (The 1st "*" part can be 'M' or '-' or 'H'; The 2nd "*" part can be "01" to "90", with interval of 1; The 3rd "*" part can be "16", "24", "35" or "48"; The 4th "*" part can be "-0.1" to "-12.9" with interval of 0.1 or blank; The 5th "*" part can be 'F' or 'T'; The 6th "*" part can be '2', "3A" or blank.)
Model Similarity	GT*41133-***-** The 1st "*" part can be 'M' or '-' or 'H' for market identification and not related to safety. The 2nd "*" part denotes the rated output wattage designation, which can be "01" to "90", with interval of 1. The 3rd "*" part denotes the standard rated output voltage designation, which can be "16", "24", "35" and "48". Each standard rated output voltage designation corresponds to a transformer model. Each transformer model is identical in insulation construction including clearance and creepage except number of turns per coil. The 4th "*" part is optional, which can be "-0.1" to "-12.9" with interval of 0.1 to denote voltage deviation or blank to indicate no voltage different. The result by subtracting the deviation value from the standard rated output voltage denotes the rated output voltage, with a range of 12-48 volts. The 5th "*" part can be 'F' to denote open frame power supply model or 'T' to denote power adapter model. The 6th "*" part can be '2' to denote Class II model or '3A' to denote Class I model when the 5th "*" part is 'T'. Otherwise, the 6th "*" part is blank when the 5th "*" part is 'F'.
Ratings	Input: 100-240V~, 50-60Hz, 1.5A; Output: Refer to illustration No.1 for details.
Other Ratings	N/A

2.0 Product Description	
Conditions of Acceptability	The products covered in this Report are incomplete in construction features or limited in performance capabilities and are intended for use and evaluation in other products. Consideration should be given to the following when the component is used in or with another product. Scope of Power Supply evaluation defers the following clauses to be determined as part of the end product investigation: • 60601-1 Clause 7.5 (Safety Signs), • 60601-1 Clause 7.9 (Accompanying Documents are provided for some critical issue like technical data, safety warnings, necessary information to set up, but further evaluation is needed on end product level.), • 60601-1 Clause 8.11.5 (Mains Fuse with High Breaking Capacity), • 60601-1 Clause 9 (ME Hazard), except 9.1 and 9.3 are evaluated, • 60601-1 Clause 10 (Radiation), • 60601-1 Clause 11.7 (Biocompatibility), • 60601-1 Clause 14 (PEMS), • 60601-1 Clause 16 (ME Systems) • 60601-1 Clause 17 (EMC), • Only Class II adapter models were evaluated by 60601-1-11. • 60601-1-11 Clause 7.1 (Usability of the accompanying documents), • 60601-1-11 Clause 7.4 (Instructions for use), • 60601-1-11 Clause 11 (Protection against strangulation or asphyxiation), • 60601-1-11 Clause 12 (Additional requirements for EMC) • 60601-1-11 Clause 13 (Additional requirements for Alarm system),

4.0 Critical Components

Photo #	Item no.[1]	Name	Manufacturer/ trademark[2]	Type / model[2]	Technical data and securement means	Mark(s) of conformity[3]
1	1	Plastic enclosure	SABIC INNOVATIVE PLASTICS B V	SE1X SE1	Min. V-1 at 1.5 mm thickness, 105℃	cURus
			SABIC INNOVATIVE PLASTICS B V	C2950	Min. V-0 at 1.5 mm thickness, 75 ℃	
			SABIC INNOVATIVE PLASTICS B V	CX7211 EXCY0098	Min. V-1 at 1.25 mm thickness, 85℃	
			TEIJIN CHEMICALS LTD	LN-1250P LN-1250G	Min. V-0 at 1.5 mm thickness, 115℃	
			CHI MEI Corporation	PA-765A	Min. V-1 at 1.5 mm thickness, 80 ℃	
			CHI MEI Corporation	PC-540	Min. V-0 at 1.5 mm thickness, 70 ℃	
1	2	AC inlet for Class I model or Class II model (alternative)	Zhejiang LECI Electronics Co., Ltd.	DB-6	2.5A, 250Vac Standard sheet: C6	cURus
			Rich Bay Co., Ltd.	R-30790 R-307		
			Sun Fair Electric Wire & Cable (HK)Co. Ltd.	S-02		
			TECX-UNIONS Technology Corporation	TU-333 series		
			Rong Feng Industrial Co., Ltd.	RF-190		
			Inalways Corporation	0724		
			Kunshan Dlk Electronics Technology Co., Ltd	CDJ-2		
			Zhejiang LECI Electronics Co., Ltd.	DB-8	2.5A, 250Vac Standard sheet: C8	
			Rich Bay Co., Ltd.	R-201SN90		
			Sun Fair Electric Wire & Cable (HK)Co. Ltd.	S-01		
			TECX-UNIONS Technology Corporation	SO-222 series		
			Rong Feng Industrial Co., Ltd.	RF-180		
			Inalways Corporation	0721 series		
			Kunshan Dlk Electronics Technology Co., Ltd	CDJ-8		

4.0 Critical Components						
Photo #	Item no.[1]	Name	Manufacturer/ trademark[2]	Type / model[2]	Technical data and securement means	Mark(s) of conformity[3]
2	3	Output cord only for adapter model	KUNSHAN NEW ZHICHENG ELECTRONICS TECHNOLOGIES CO LTD	1185 2464 2468 1015	Min. 20AWG, min. 300Vac, min. 80℃	cURus
			ZHUANG SHAN CHUAN ELECTRICAL PRODUCTS (KUNSHAN) CO LTD	1185 2464 2468 1015	Min. 20AWG, min. 300Vac, min. 80℃	
			ZHUANG SHAN CHUAN ELECTRICAL PRODUCTS (KUNSHAN) CO LTD	SPT-1 SPT-2	Min. 20AWG, min. 300Vac, min. 105℃	
			SUZHOU YEMAO ELECTRONIC CO LTD	1185 2464 2468 1015	Min. 20AWG, min. 300Vac, min. 80℃	
			SUZHOU DIOUDE ELECTRONICS CO LTD	SPT-1 SPT-2	Min. 20AWG, min. 300Vac, min. 105℃	
			Various	Various	Min. 20AWG, min. 300Vac, min. 80℃	
3, 5	4	Earthing wire for class I model only	KUNSHAN NEW ZHICHENG ELECTRONICS TECHNOLOGIES CO LTD	1015 1007	Min. 18AWG, min. 300Vac, min. 80℃	cURus
			ZHUANG SHAN CHUAN ELECTRICAL PRODUCTS (KUNSHAN) CO LTD			
			DONGGUAN CHUANTAI WIRE PRODUCTS CO LTD			
			YONG HAO ELECTRICAL INDUSTRY CO LTD			
			SHENG YU ENTERPRISE CO LTD			
			SUZHOU HONGMENG ELECTRONIC CO LTD			
			SUZHOU YEMAO ELECTRONIC CO LTD			
			Various			

4.0 Critical Components

Photo #	Item no.[1]	Name	Manufacturer/ trademark[2]	Type / model[2]	Technical data and securement means	Mark(s) of conformity[3]
3, 5	5	Insulating tube used on Class I AC inlet pin, cartridge fuse and heatsink	SHENZHEN WOER HEAT-SHRINKABLE MATERIAL CO LTD	RSFR RSFR-H RSFR-HPF	600V, 125℃	cURus
			QIFURUI ELECTRONICS CO	QFR-h	600V, 125℃	
			DONGGUAN SALIPT CO LTD	SALIPT S-901-300 SALIPT S-901-600	Min. 300V, 125℃	
			GUANGZHOU KAIHENG ENTERPRISE GROUP	K-2 (+) K-2 (CB)	Min. 300V, 125℃	
			CHANGYUAN ELECTRONICS (SHENZHEN) CO LTD	CB-HFT	Min. 300V, 125℃	
5	6	PCB material	TECHNI TECHNOLOGY LTD	T2A T2B T4	Min 1.6 mm thickness, min. V-0, 130℃	cURus
			DONGGUAN HE TONG ELECTRONICS CO LTD	CEM1		
			CHEERFUL ELECTRONIC	03 03A		
			DONGGUAN DAYSUN ELECTRONIC CO LTD	DS2		
			SUZHOU CITY YILIHUA ELECTRONICS CO LTD	YLH-1		
			SHANGHAI AREX PRECISION ELECTRONIC CO LTD	02V0 04V0		
			BRITE PLUS ELECTRONICS (SUZHOU) CO LTD	DKV0-3A		
			SHENZHEN TONGCHUANGXIN ELECTRONICS CO LTD	TCX		
			Various	Various		

4.0 Critical Components						
Photo #	Item no.[1]	Name	Manufacturer/ trademark[2]	Type / model[2]	Technical data and securement means	Mark(s) of conformity[3]
5	7	Fuse (F1, F2) (F2 is optional in Class II model)	Conquer Electronics Co., Ltd.	MST	T3.15A, 250Vac, interrupting rating 35A	cURus
			Ever Island Electric Co., Ltd. and Walter Electric	2010	T3.15A, 250Vac, interrupting rating 130A	
			Bel Fuse Ltd.	RST	T3.15A, 250Vac, interrupting rating 100A	
			Cooper Bussmann LLC	SS-5	T3.15A, 250Vac, interrupting rating 35A	
			Walter Electronic Co. Ltd.	ICP series	T3.15A, 250Vac, interrupting rating 50A	
			Zhongshan Lanbao Electrical Appliances Co., Ltd.	RTI-10 series	T3.15A, 250Vac, interrupting rating 50A	
			Sun Electric Co.	5T	T3.15A, 250Vac, interrupting rating 100A	
			Bel Fuse Ltd.	5ST	T3.15A, 250Vac, interrupting rating 35A	
			Das & Sons International Ltd.	385T series	T3.15A, 250Vac, interrupting rating 35A	
			Shenzhen Lanson Electronics Co. Ltd.	SMT	T3.15A, 250Vac, interrupting rating 35A	
5	8	Varistor (MOV1) (optional)	JOYIN CO LTD	07N471K 10N471K 14N471K	Maximum continuous voltage: 300Vac	cURus
			CENTRA SCIENCE CORP	07D471K 10D471K 14D471K		
			THINKING ELECTRONIC INDUSTRIAL CO LTD	TVR07471K TVR10471K TVR14471K		
			SUCCESS ELECTRONICS CO LTD	SVR07D471K SVR10D471K SVR14D471K		
			CERAMATE TECHNICAL CO LTD	GNR07D471K GNR10D471K GND14D471K		
			BRIGHTKING (SHENZHEN) CO LTD	07D471K 10D471K 14D471K		
			LIEN SHUN ELECTRONICS CO LTD	07D471K 10D471K 14D471K		
			HONGZHI ENTERPRISES LTD	HEL-07D471K HEL-10D471K HEL-14D471K		
			GUANGXI NEW FUTURE INFORMATION INDUSTRY CO LTD	07D471K 10D471K 14D471K		

4.0 Critical Components						
Photo #	Item no.[1]	Name	Manufacturer/ trademark[2]	Type / model[2]	Technical data and securement means	Mark(s) of conformity[3]
5	9	X capacitor (CX1) (Optional)	Cheng Tung Industrial Co., Ltd.	CTX	Max.0.47uF, 310Vac, 110℃, type X2	cURus
			Tenta Electric Industrial Co. Ltd.	MEX	Max.0.47uF, 275Vac, 100℃, type X2	
			Ultra Tech Xiphi Enterprise Co. Ltd.	HQX	Max.0.47uF, 275Vac, 110℃, type X2	
			Okaya Electric Industries	RE series	Max.0.47uF, 275Vac, 100℃, type X2	
			VISHAY Capacitors Belgium NV	F1772	Max.0.47uF, 310Vac, 110℃, type X2	
			Winday Electronic Industries Co., Ltd.	MPX	Max.0.47uF, 275Vac, 110℃, type X2	
			Dain Electronics Co., Ltd.	MPX, MEX and NPX	Max.0.47uF, 275Vac, 100℃, type X2	
			Sinhua Electronics (Huzhou) Co., Ltd.	MPX	Max.0.47uF, 310Vac, 110℃, type X2	
			Shunde Da Hua Electric Co., Ltd.	HD-MKP	Max.0.47uF, 250Vac, 105℃, type X2	
			Foshan Shunde Chuang Ge	MKP-X2	Max.0.47uF, 275Vac, 105℃, type X2	
			Hongzhi Enterprises Ltd.	MPX	Max.0.47uF, 275Vac, 100℃, type X2	
5	10	Line filter (LF1) (Optional)	GlobTek/ZhongTong /HEJIA/BOAM	LF001	Class A	NR
5	11	Line filter (LF2) (Optional)	GlobTek/ZhongTong /HEJIA/BOAM	LF002	Class A	NR
5	12	Line filter (LF3) (Optional)	GlobTek/ZhongTong /HEJIA/BOAM	LF003	Class A	NR
5	13	PFC Chock (L2) (Optional)	GlobTek/ZhongTong /HEJIA/BOAM	LF004	Class A	NR
5	14	Y-Capacitor (CY1, CY2) (optional)	SUCCESS ELECTRONICS CO LTD	SE SB	Type Y1, max. 1000pF, min. 250V, min. 125℃	cURus
			TDK-EPC CORPORATION	CD	Type Y1, max. 1000pF, min. 250V, min. 125℃	
			MURATA MFG CO LTD	KX	Type Y1, max. 1000pF, min. 250V, min. 125℃	
			WALSIN TECHNOLOGY CORP	AH	Type Y1, max. 1000pF, min. 250V, min. 125℃	
			JYA-NAY CO LTD	JN	Type Y1, max. 1000pF, min. 250V, min. 125℃	
			HAOHUA ELECTRONIC CO	CT7	Type Y1, max. 1000pF, min. 250V, min. 125℃	
			JERRO ELECTRONICS CORP	JX-series	Type Y1, max. 1000pF, min. 250V, min. 125℃	
5	15	Optocoupler (U2) (Not shown)	LITE-ON Technology Corporation	LTV-817C	Ext. Cr: min. 8.0 mm; DTI: min. 0.6 mm; Thermal cycling test. Max. operating temp.: 115℃.	CB
			Everlight Electronics Co., Ltd.	EL817	Ext. Cr: min. 7.7 mm; DTI: min. 0.5 mm; Thermal cycling test. Max. operating temp.: 110℃.	
5, 9-14	16	Transformer (T1)	GlobTek/ZhongTong /BOAM	TF012 TF013 TF014 TF015	Class B, with insulation system and critical component listed below. Refer to illustration No. 7&8 for Spec.	NR

4.0 Critical Components						
Photo #	Item no.[1]	Name	Manufacturer/ trademark[2]	Type / model[2]	Technical data and securement means	Mark(s) of conformity[3]
5, 9-14	16a	Insulation system	GLOBTEK INC	GTX-130-TM	Class 130(B)	cURus
			WUXI ZHONGTONG ELECTRONICS CO LTD	ZT-130		
			SHAN DONG BOAM ELECTRIC CO LTD	BOAM-01		
5, 9-14	16b	Magnet wire (Primary)	PACIFIC ELECTRIC WIRE & CABLE (SHENZHEN) CO LTD	UEWN/U	130℃	cURus
			JUNG SHING WIRE CO LTD	UEW-4 UEY-2		
			JIANGSU HONGLIU MAGNET WIRE TECHNOLOGY CO LTD	2UEW/130		
			CHANGZHOU DAYANG WIRE & CABLE CO LTD	2UEW/130		
			WUXI JUFENG COMPOUND LINE CO LTD	2UEWB		
			JIANGSU DARTONG M & E CO LTD	UEW		
			SHANDONG SAINT ELECTRIC CO LTD	UEW/130		
			ZHEJIANG LANGLI ELECTRIC EQUIPMENTS CO LTD	UEW		
5, 9-14	16c	Insulating tape	3M COMPANY ELECTRICAL MARKETS DIV (EMD)	1350F-1 1350T-1 44	Min.130℃	cURus
			BONDTEC PACIFIC CO LTD	370S		
			JINGJIANG YAHUA PRESSURE SENSITIVE GLUE CO LTD	PZ CT WF		
			JINGJIANG JINGYI ADHESIVE PRODUCT CO LTD	JY25-A		
			CHANG SHU LIANG YI TAPE INDUSTRY CO LTD	LY-XX		
5, 9-14	16d	Bobbin	CHANG CHUN PLASTICS CO LTD	T375J T375HF	V-0, 150℃, thickness 0.45 mm min.	cURus
			SUMITOMO BAKELITE CO LTD	PM-9820		
			HITACHI CHEMICAL CO LTD	CP-J-8800		

4.0 Critical Components

Photo #	Item no.[1]	Name	Manufacturer/ trademark[2]	Type / model[2]	Technical data and securement means	Mark(s) of conformity[3]
5, 9-14	16e	Triple-insulated wire (Secondary winding)	GREAT LEOFLON INDUSTRIAL CO LTD	TRW(B)	Min. 130℃	cURus
			COSMOLINK CO LTD	TIW-M		
			FURUKAWA ELECTRIC CO LTD	TEX-E		
			TOTOKU ELECTRIC CO LTD	TIW-2		
7	17	Mylar Insulating sheet on the heatsink (Not shown) (Optional)	TORAY INDUSTRIES INC	Lumirror H10	VTM-2, min. 0.4 mm thickness, 105℃	cURus
			SKC CO LTD	SH71S	VTM-2, min. 0.4 mm thickness, 105℃	
			FORMEX,DIV OF IL TOOL WORKS INC, FRMRLY FASTEX, DIV OF IL TOOL WORKS INC	FORMEX GK series	V-0, min. 0.4 mm thickness, 115° C	
			SABIC INNOVATIVE PLASTICS US L L C	FR60 series FR63 series FR65 series FR7 series FR700 series	V-0, min. 0.4 mm thickness, 130° C	
			MIANYANG LONGHUA FILM CO LTD	PP-BK-20 PP-BK-17 PP-BK-18	VTM-0, min. 0.4 mm thickness, 80℃	
			CHENGDU KANGLONGXIN PLASTICS CO LTD	KLX PP WT-10 series	VTM-0, min. 0.4 mm thickness, 110℃	
7, 8	18	Insulating tape wrapping around the heatsink (Optional)	3M COMPANY ELECTRICAL MARKETS DIV (EMD)	1350F-1 1350T-1	Min.130℃	cURus
			BONDTEC PACIFIC CO LTD	370S		
			JINGJIANG YAHUA PRESSURE SENSITIVE GLUE	PZ CT		
			JINGJIANG JINGYI ADHESIVE PRODUCT CO LTD	JY25-A		
			CHANG SHU LIANG YI TAPE INDUSTRY CO LTD	LY-XX		

NOTES:
1) Not all item numbers are indicated (called out) in the photos, as their location is obvious.
2) “Various“ means any type, from any manufacturer that complies with the "Technical data and securement
3) Indicates specific marks to be verified, which assures the agreed level of surveillance for the component. "NR" - indicates Unlisted and only visual examination is necessary. "See 5.0" indicates Unlisted components or assemblies to be evaluated periodically refer to section 5.0 for details.

5.0 Critical Unlisted CEC Components
No Unlisted CEC components are used in this report.

6.0 Critical Features

Recognized Component - A component part, which has been previously evaluated by an accredited certification body with restrictions and must be evaluated as part of the basic product considering the restrictions as specified by the Conditions of Acceptability.

Listed Component - A component part, which has been previously Listed or Certified by an accredited Certification Organization with no restrictions and is used in the intended application within its ratings.

Unlisted Component - A part that has not been previously evaluated to the appropriate designated component standard. It may also be a Listed or Recognized component that is being used outside of its evaluated Listing or component recognition.

Critical Features/Components - An essential part, material, subassembly, system, software, or accessory of a product that has a direct bearing on the product's conformance to applicable requirements of the product standard.

Construction Details - For specific construction details, reference should be made to the photographs and descriptions. All dimensions are approximate unless specified as exact or within a tolerance. In addition to the specific construction details described in this Report, the following general requirements also apply.

1. Spacing - Refer to illustration No(s) 2-3 for details.
2. Mechanical Assembly - Components such as switches, fuseholders, connectors, wiring terminals and display lamps are mounted and prevented from shifting or rotating by the use of lockwashers, starwashers, or other mounting format that prevents turning of the component.
3. Corrosion Protection - All ferrous metal parts are protected against corrosion by painting, plating or the equivalent.
4. Accessibility of Live Parts - For adapter models, all uninsulated live parts in primary circuitry are housed within a non-metallic enclosure constructed with no openings and metal enclosure earthed with ventilation holes other than those specifically described in Sections 4 and 5.
5. Grounding - All exposed dead-metal parts and all dead-metal parts within the enclosure that are exposed are connected to the grounding lead of the power supply cord and the equipment grounding terminal.
6. Polarized Connection - This product is provided with a polarized power supply connection.
7. Internal Wiring - Internal wiring is routed away from sharp or moving parts. Internal wiring leads terminating in soldered connections are made mechanically secure prior to soldering. Recognized Component separable (quick disconnect) connectors of the positive detent type, closed loop connectors, or other types specifically described in the text of this report are also acceptable as internal wiring terminals. At points where internal wiring passes through metal walls or partitions, the wiring insulation is protected against abrasion or damage by plastic bushings or grommets. All internal wiring is contained in the recognized subassembly.
8. Schematics - Refer to Illustration No(s). 4-5 for schematics & PCB layout requiring verification during Field Representative Inspection Audits.
9. Markings - The product is marked as follows: brand name, model number, electrical ratings, manufacturer. Refer to Illustration No. 6 for details.
10. Cautionary Markings - Refer to illustrations No. 6 for details.
11. Safety Instructions - Accompanying Documents are provided for some critical issue like technical data, safety warnings, necessary information to set up, but further evaluation is needed on end product level.

7.0 Illustrations

Illustration 1 - Model list

Model	Rated output voltage range	Max. rated output current	Max. rated output power	Transformer designation
GT*41133-*16*-**	12-16Vdc	7.5A	90W	TF013
GT*41133-*24*-**	16.1-24Vdc	5.6A	90W	TF014
GT*41133-*35*-**	24.1-35Vdc	3.73A	90W	TF015
GT*41133-*48*-**	35.1-48Vdc	2.56A	90W	TF012

Illustration 2 - INSULATION DIAGRAM

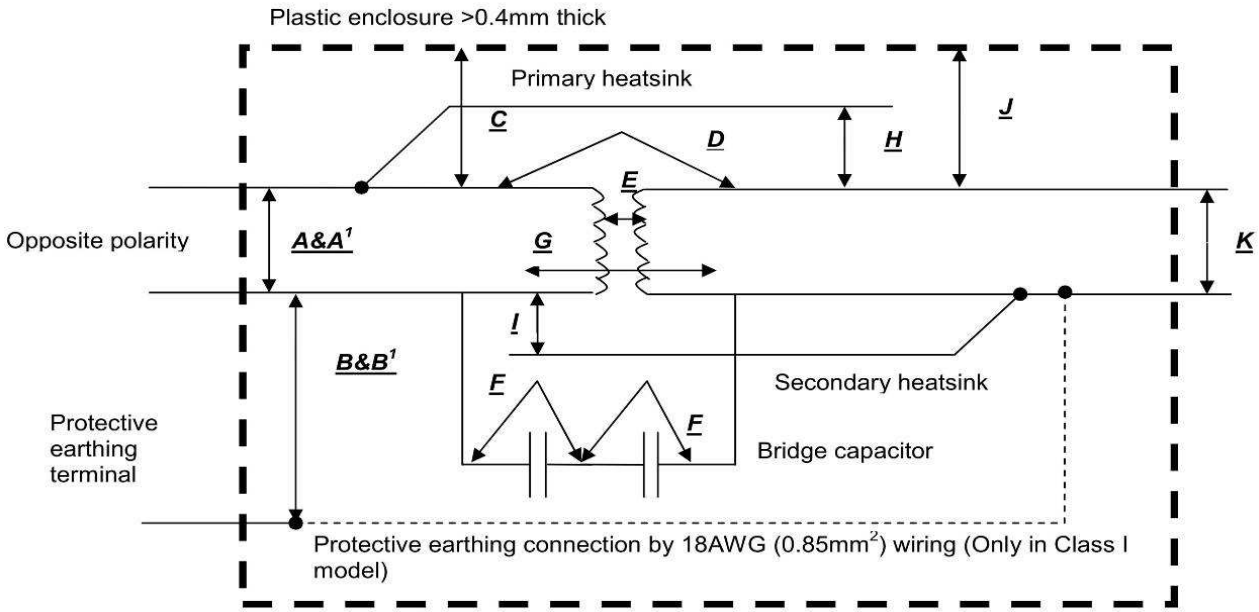

7.0 Illustrations

Illustration 3 - TABLE: Insulation diagram (measured values)

Pollution degree:	**2**	—
Overvoltage category:	**II**	—
Altitude:	**Up to 5000m**	—
Additional details on parts considered as applied parts:	☒ **None** ☐ **Areas** _____ (See Clause 4.6 for details)	—

Area	Number and type of Means of Protection: MOOP, MOPP	CTI (IIIb, unless is known)	Working voltage		Required creepage (mm)	Required clearance (mm)	Measured creepage (mm)	Measured clearance (mm)	Remarks
			Vrms	Vpk					
A	BOP	IIIb	240	--	3	2.4[2]	4.1	4.1	Opposite polarity of mains part
A[1]	BOP	IIIb	240	--	3	2.4[2]	4.2	4.2	Opposite polarity of mains part
B	MOPP	IIIb	240	340	4.0	3.3[2]	5.0	5.0	Mains parts to PE terminal (On power inlet)
B[1]	MOPP	IIIb	240	340	4.0	3.3[2]	4.2	4.2	Mains parts to PE terminal (Along PCB trace)
C	2MOPP	IIIb	240[4]	--	7.9[5]	6.5[2]	8.0[3]	8.0[3]	Internal mains part to accessible outer enclosure (Only for power adapter model)
D	2MOPP	IIIb	240[4]	--	7.9[5]	6.5[2]	10.0[6]	10.0[6]	Mains parts to secondary pin-out (Optocoupler)
E	2MOPP	IIIb	357[4]	--	10.9[5]	9.1[2]	11.0[7]	11.0[7]	Primary side (including ferrite) to secondary pin-out (Transformer)
F	MOPP (Each) x 2	IIIb	240[4]	--	4.0[5]	3.3[2]	6.0	6.0	Primary side to secondary side (Y capacitor x 2)
G	2MOPP	IIIb	240[4]	--	7.9[5]	6.5[2]	12.4	12.4	Mains parts to secondary parts (Nearest points along PCB trace)
H	2MOPP	IIIb	240[4]	--	7.9[5]	6.5[2]	10.0[8]	10.0[8]	Primary heatsink to secondary circuit
I	2MOPP	IIIb	240[4]	--	7.9[5]	6.5[2]	10.0[8]	10.0[8]	Primary circuit to secondary heatsink
J	2MOPP	IIIb	60[4]	--	4.6	3.1[2]	5.7	5.7	Internal secondary part to accessible outer enclosure (Only for power adapter model)
K	2MOPP	IIIb	Max. 48Vdc	--	--	--	--	--	Accessible parts per 8.4.2 c)

Note:

1) The same area is evaluated in open frame model. And there is no more difference if not specified.
2) Multiplication factor for MOOP: 1.48; Multiplication factor for MOPP: 1.29.
3) Minimum 0.4 mm thick Mylar sheet or two layers of insulating tape wrap around internal conductive parts along the enclosure joint. This method is applied only to the model sold to high elevation region. Otherwise, the clearance and creepage distance is measured as 5.7/5.7 mm.
4) The working voltage is highest measured value which acquired by testing all the models listed in the report at the rated input voltage, but not less than the rated input voltage.
5) Linear interpolation is applied to the determination of required creepage.
6) The minimum creepage and clearance is selected from all the types of optocouplers.
7) The bottom of ferrite core is wrapped around 2 layers of insulating tape.
8) Two layers of insulating tape or two layers of insulating tube wrap around the heatsink.

7.0 Illustrations

Illustration 6 - Marking label

The marking plates of the other models listed in this report are identical with below except model name and output parameter.

Note: For power adapter model, the left one represents Class I model series & the right one represents Class II model series. Only Class II adapter models were evaluated by 60601-1-11.

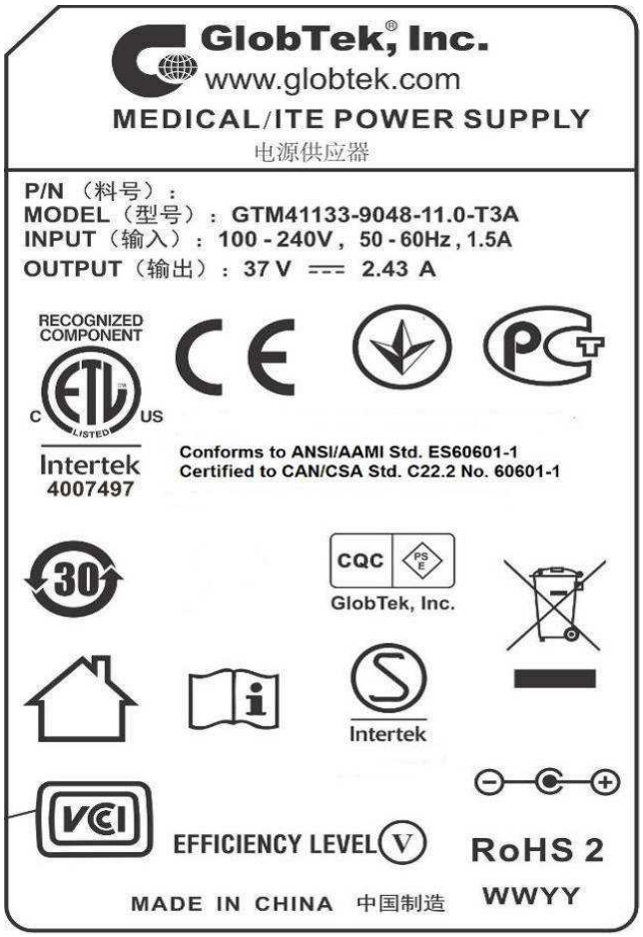

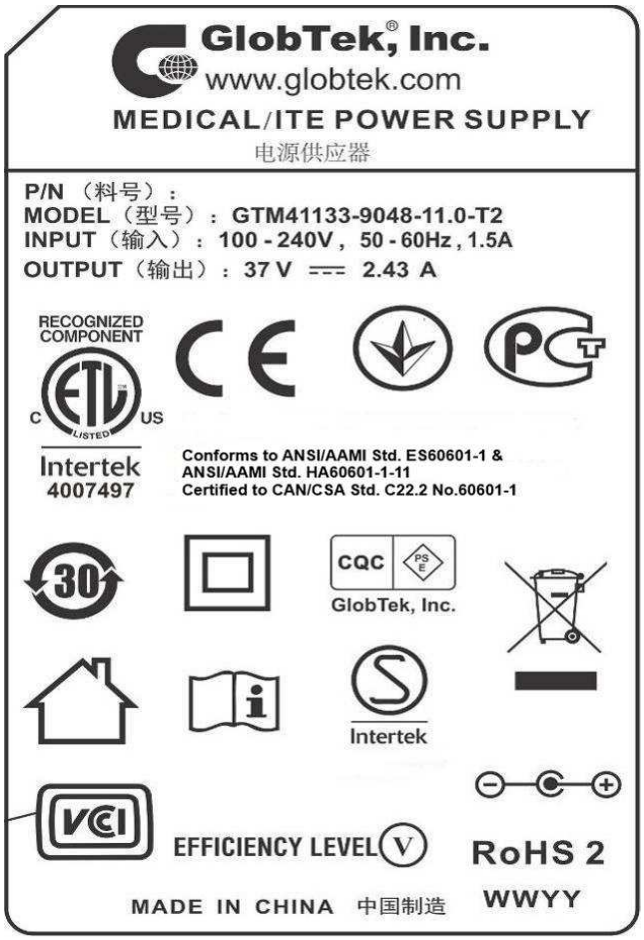

Marking plate of open frame model

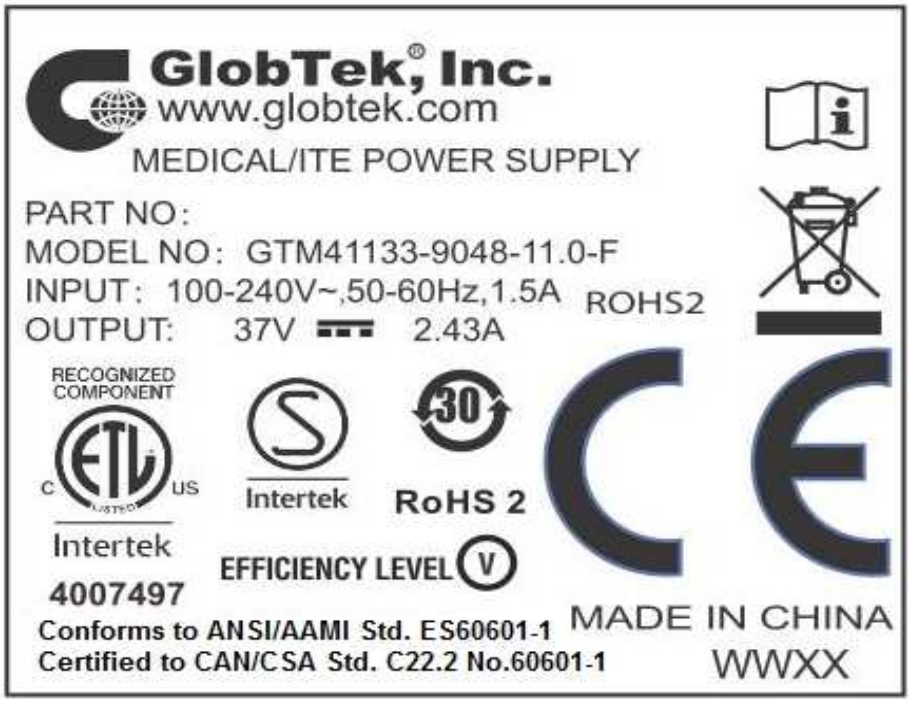

7.0 Illustrations

Illustration 7 - Mains transformer specification

1. DIMENSION (UNIT : mm)

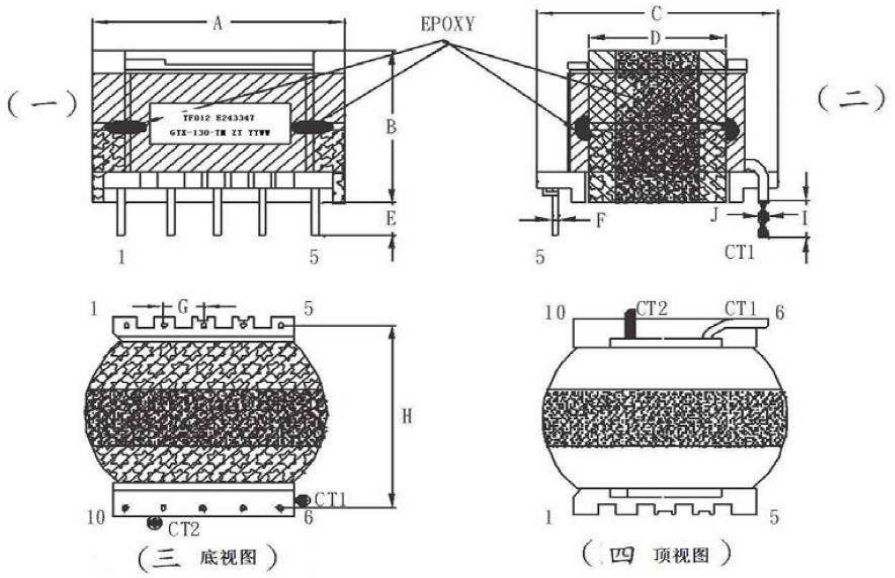

NOTE:

1. PIN6, 7, 8, 10 CUT OFF
2. 磁芯中柱及接缝处（4点）需点胶固定。
3. 针脚侧磁芯需用 30mm 胶带裹覆。
4. 磁芯浸漆之后将磁芯胶带拆除，沿磁芯方向包一圈0.025*7mm（背胶）铜箔，焊点在PIN1-10脚侧，引线接在PIN5脚。
5. 成品在磁芯针脚侧包2层26mm"U"型胶带，顶部不包，最后沿线圈方向包2圈14mm胶带。

DIM	A	B	C	D	E	F	G	H	I	J
	MAX	MAX	MAX	MAX	+/-0.3	+/-0.1	+/-0.5	+/-0.5	+/-1.0	MAX
SPEC	36.0	19.6	38.0	24.0	4.5	0.8	5.0	33.5	4.5	1.8

2. SHCEMATIC:

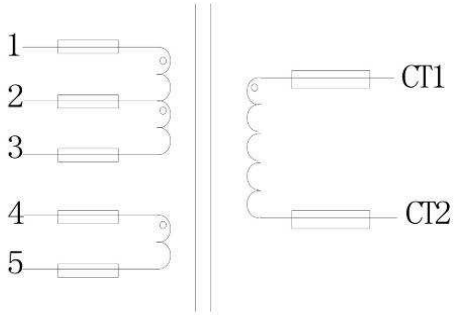

7.0 Illustrations

Illustration 8 - Mains transformer specification (cont.)

3. ELECTRICAL CHARACTERISTICS

NO	ITEM	TERMINAL	SPECIFICATION	REMARKS
3-1	INDUCTANCE	1-3	475uH±10%	GainKaiTa3250 @30KHz,1Vrms
3-2	LEAK INDUCTANCE	1-3 短路其他绕组	25uH MAX	
3-3	HI-POT TESTING	Pri-Sec	AC 3.75KV/2mA/3S	CJ2670
		Pri-Core	AC 1.5KV/2mA/3S	
		Sec-Core	AC 1.5KV/2mA/3S	

4. WINDING SPEC

NO	TERMINAL		TURNS	WIRE	STRANDS	INSULATION MATERIAL	INSULATION LAYERS
	S	F					
N1	1	2	26	2UEW/130 Φ0.10	25	PET 0.025	2
E1	5		0.9	0.05*7W(背胶)		PET 0.025	2
N2	CT1	CT2	11	TRWB Φ0.55	2	PET 0.025	2
N3	4	5	8	2UEW/130 Φ0.22	2	PET 0.025	2
N4	2	3	12	2UEW/130 Φ0.10	25	PET 0.025	2

1. N1 绕组需层间绝缘。
2. N3 疏绕一层。
3. N2 均为飞线引出，CT1 穿透明套管，从 PIN6 脚侧旁进线。CT2 穿黑色套管，从 PIN9,10 脚间出线。

环球特新（苏州）电源科技有限公司 GLOBTEK SUZHOU
2013. 06.24
受控文件
发行章

8.0 Test Summary					
Evaluation Period	2013-09-02~2013-09-29			Project No.	130801751SHA
Sample Rec. Date	2-Sep-2013	Condition	Prototype	Sample ID.	0130902-24-001/002/003
Test Location	Building No.86, 1198 Qinzhou Road (North), Shanghai 200233, China				
Test Procedure	Testing Lab				

Determination of the result includes consideration of measurement uncertainty from the test equipment and methods. The product was tested as indicated below with results in conformance to the relevant test criteria.

The following tests were performed:

Test Description	Medical Electrical Equipment, Part 1: General Requirements for Basic Safety and Essential Performance (ANSI/AAMI ES60601-1 Issued: 2006/03/09: 2005 Version (R2012); with AMD C1: 2009, AMD C2: 2010 & CAN/CSA-C22.2 No.60601-1 Issued: 2008/02/01; with COR 2: 2011/06/01) Clause
Power Input	4.11
Humidity Preconditioning	5.7
Accessible Parts	5.9.2
Legibility of Markings	7.1.2
Durability of Markings	7.1.3
Plug Voltage and/or Energy	8.4.3
Working Voltage Measurement	8.5.4
Earthing	8.6.4
Leakage Current Test terminations	8.7.4
Dielectric Strength Means	8.8.3
Ball Pressure Test	8.8.4.1
Creepage & Clearance Measurements	8.9.4
Excessive Temperature	11.1
Single Fault Conditions	13.2
Push Test	15.3.2
Impact Test	15.3.3
Drop Test	15.3.4
Moulding Stress Relief	15.3.6
Transformer Short-Circuit	15.5.1.2
Transformer Overload	15.5.1.3
Transformer Dielectric Strength	15.5.2

Test Description	Medical electrical equipment, Part 1-11: General requirements for basic safety and essential performance - Collateral Standard: Requirements for medical electrical equipment and medical electrical systems used in the home healthcare environment (ANSI/AAMI HA60601-1-11 Issue:2011/12/12 Ed:1) Clause
Environmental conditions of transport and storage between uses	4.2.1
Environmental operating conditions	4.2.2
Shock test	10.1.2 a)
Vibration test	10.1.2 b)

8.1 Signatures			
A representative sample of the product covered by this report has been evaluated and found to comply with the applicable requirements of the standards indicated in Section 1.0.			
Completed by:	Jamie Wu	Reviewed by:	Will Wang
Title:	Project engineer	Title:	Reviewer
Signature:	Jamie Wu	Signature:	Will Wang

9.0 Correlation Page For Multiple Listings

The following products, which are identical to those identified in this report except for model number and Listee name, are authorized to bear the ETL label under provisions of the Intertek Multiple Listing Program.

BASIC LISTEE	GlobTek, Inc.
Address	186 Veterans Dr. Northvale, NJ 07647 USA
Country	USA
Product	Medical Power Supply

MULTIPLE LISTEE 1	None
Address	
Country	
Brand Name	
ASSOCIATED MANUFACTURER	
Address	
Country	

MULTIPLE LISTEE 1 MODELS	BASIC LISTEE MODELS

MULTIPLE LISTEE 2	None
Address	
Country	
Brand Name	
ASSOCIATED MANUFACTURER	
Address	
Country	

MULTIPLE LISTEE 2 MODELS	BASIC LISTEE MODELS

MULTIPLE LISTEE 3	None
Address	
Country	
Brand Name	
ASSOCIATED MANUFACTURER	
Address	
Country	

MULTIPLE LISTEE 3 MODELS	BASIC LISTEE MODELS

10.0 General Information

The Applicant and Manufacturer have agreed to produce, test and label ETL Listed products in accordance with the requirements of this Report. The Manufacturer has also agreed to notify Intertek and to request authorization prior to using alternate parts, components or materials.

COMPONENTS

Components used shall be those itemized in this Intertek report covering the product, including any amendments

LISTING MARK

The ETL Listing mark applied to the products shall either be separable in form, such as labels purchased from Intertek, or on a product nameplate or other media only as specifically authorized by Intertek. Use of the mark is subject to the control of Intertek.

The mark must include the following four items:

1) applicable country identifiers "US" and/or "C" or "US", "C" and "EU"
2) the word "Listed" or "Classified" or "Recognized Component" (whichever is appropriate)
3) a control number issued by Intertek
4) a product descriptor that identifies the standards used for certification. Example:

For US standards, the words, “Conforms to” shall appear with the standard number along with the word, “ Standard” or “Std.” Example: “Conforms to ANSI/UL Std. XX.”

For Canadian standards, the words “Certified to CAN/CSA Standard CXX No. XX.” shall be used, or abbreviated, “Cert. to CAN/CSA Std. CXX No. XX.”

Can be used together when both standards are used.

Note: A facsimile must be submitted to Intertek, Attn: Follow-up Services for approval prior to use. The facsimile need not have a control number. A control number will be issued **after signed Certification Agreements** have been received by the Follow-up Services office, approval of the facsimile of your proposed Listing Mark, satisfactory completion of the Listing Report, and scheduling of a factory assessment in your facility.

MANUFACTURING AND PRODUCTION TESTS

Manufacturing and Production Tests shall be performed as required in this Report.

FOLLOW-UP SERVICE

Periodic unannounced audits of the manufacturing facility (and any locations authorized to apply the mark) shall be scheduled by Intertek. An audit report shall be issued after each visit. Special attention will be given to the following:

1. Conformance of the manufactured product to the descriptions in this Report.
2. Conformance of the use of the ETL mark with the requirements of this Report and the Certification Agreement.
3. Manufacturing changes.
4. Performance of specified Manufacturing and Production Tests.

In the event that the Intertek representative identifies non-conformance(s) to any provision of this Report, the Applicant shall take one or more of the following actions:

1. Correct the non-conformance.
2. Remove the ETL Mark from non-conforming product.
3. Contact the issuing product safety evaluation center for instructions.

10.1 Evaluation of Unlisted Components

Because Unlisted Components are uncontrolled, and they do not fall under a third party follow up program, Intertek may require these components to be tested and/or evaluated at least once annually, more often for certain components, as part of the independent certification process. The Unlisted Components in Section 5.0 require testing and/or evaluation as indicated.

Note to Intertek Follow Up Inspector: The Component Evaluation Center, CEC, will notify you in writing when these components must be selected and sent to the CEC for re-evaluation

Ship the samples to:
Intertek Testing Services Shanghai Limited
ETL Component Evaluation Center
Building No. 86, 1198 Qinzhou Road (North)
Shanghai 200233, China
Attn: Ms. Dansy Xu
Sample Disposition: Due to the destructive nature of the testing, all samples will be discarded at the conclusion of testing unless, the manufacturer specifically requests the return of the samples. The request for return must accompany the initial component shipment.

11.0 Manufacturing and Production Tests

The manufacturer agrees to conduct the following Manufacturing and Production Tests as specified:

Required Tests
Dielectric Voltage Withstand Test
Grounding Continuity Test

11.1 Dielectric Voltage Withstand Test

Method

One hundred percent of production of the products covered by this Report shall be subjected to a routine production line dielectric withstand test.
The test shall be conducted on products, which are fully assembled. Prior to applying the test potential, all switches, contactors, relays, etc., should be closed so that all primary circuits are energized by the test potential. If all primary circuits cannot be tested at one time, then separate applications of the test potential shall be made.

The test voltage specified below shall be applied between primary circuits and accessible dead-metal parts. The test voltage may be gradually increased to the specified value but must be maintained at the specified value for one second or one minute as required.

Test Equipment

The test equipment shall incorporate a transformer with an essentially sinusoidal output, a means to indicate the applied test potential, and an audible and/or visual indicator of dielectric breakdown.
The test equipment shall incorporate a voltmeter in the output circuit to indicate directly the applied test potential if the rated output of the test equipment is less than 500VA.
If the rated output of the test equipment is 500VA or more, the applied test potential may be indicated by either:
1 - a voltmeter in the primary circuit;
2 - a selector switch marked to indicate the test potential; or
3 - a marking in a readily visible location to indicate the test potential for test equipment having a single test potential output.
In cases 2 and 3, the test equipment shall include a lamp or other visual means to indicate that the test potential is present at the test equipment output. All test equipment shall be maintained in current calibration.

Products Requiring Dielectric Voltage Withstand Test:

Product	Test Voltage	Test Time
Between L/N and PE terminal for Class I models only	1500V	1 s
Between L/N and secondary output for Class II models only	4000V	1 s

11.2 Grounding Continuity Test

Method
Each product listed below shall be subjected to a test to determine that there is continuity between accessible dead-metal parts of the product and the grounding pin or blade of the attachment plug.
If all accessible dead metal is connected, only a single test need be performed. A visual or audible device (ohmmeter, buzzer, etc.) may be used to indicate grounding continuity.

Products Requiring Grounding Continuity Test:

Class I models covered by this Report.

12.0 Revision Summary

The following changes are in compliance with the declaration of Section 8.1:

Date/ Proj # Site ID	Project Handler/ Reviewer	Section	Item	Description of Change
				None