Test Report issued under the responsibility of:

Underwriters Laboratories Inc.

TEST REPORT
IEC 60601-1
Medical Electrical Equipment
Part 1:General requirements for safety

Report Reference No ..... :	E172861-A15-CB-1
Date of issue ..... :	2010-11-29
Total number of pages ..... :	65
CB Testing Laboratory ..... :	Underwriters Laboratories Inc.
Address ..... :	1285 Walt Whitman Road, Melville, NY, 11747, USA
Applicant's name ..... :	GLOBTEK INC
Address ..... :	186 VETERANS DR NORTHVALE NJ 07647 UNITED STATES
Test specification:	
Standard ..... :	IEC 60601-1:1988 + A1:1991 + A2:1995
Test procedure ..... :	CB Scheme
Non-standard test method ..... :	N/A
Test Report Form No. ..... :	IEC60601_1c/97-04
Test Report Form originator ..... :	Underwriters Laboratories Inc
Master TRF ..... :	dated 97-04

This report is not valid as a CB Test Report unless signed by an approved CB Testing Laboratory and appended to a CB Test Certificate issued by an NCB in accordance with IECEE 02.

Test item description .....:	Switching Power Supply, Built-In AC/DC
Trade Mark .....:	Globtek or
Manufacturer .....:	GLOBTEK INC 186 VETERANS DR NORTHVALE NJ 07647 UNITED STATES
Model/Type reference .....:	GTM9200P Series
Rating .....:	Input - Voltage: 100-240 Vac Frequency: 50-60 Hz Rated Current for 350 W units: 5.0 A (except for GTM9200P2313.3 which is rated at 4.0 A) Rated Current for 200 W units: 3.2 A (except for Models GTM9200P1323.3 which is rated 2.5 A) Note: See the Model Differences section of report for Output ratings.

Testing procedure and testing location:		
[x]	**CB Testing Laboratory**	
	Testing location / address..... :	Underwriters Laboratories Inc. 1285 Walt Whitman Road, Melville, NY, 11747, USA
[ ]	**Associated CB Test Laboratory**	
	Testing location / address..... :	
	Tested by (name + signature) ..... :	AnnaMarie Vessey
	Approved by (+ signature) ..... :	David V. Alma
[ ]	**Testing Procedure: TMP**	
	Tested by (name + signature) ..... :	
	Approved by (+ signature) ..... :	
	Testing location / address..... :	
[ ]	**Testing Procedure: WMT**	
	Tested by (name + signature) ..... :	
	Witnessed by (+ signature)..... :	
	Approved by (+ signature) ..... :	
	Testing location / address..... :	
[ ]	**Testing Procedure: SMT**	
	Tested by (name + signature) ..... :	
	Approved by (+ signature) ..... :	
	Supervised by (+ signature) ..... :	
	Testing location / address..... :	
[ ]	**Testing Procedure: RMT**	
	Tested by (name + signature) ..... :	
	Approved by (+ signature) ..... :	
	Supervised by (+ signature) ..... :	
	Testing location / address..... :	

Summary Of Testing
Unless otherwise indicated, all tests were conducted at Underwriters Laboratories Inc. 1285 Walt Whitman Road, Melville, NY, 11747, USA.

Tests performed (name of test and test clause)	**Testing location / Comments**
Power Input (7.1)	
Voltage Limitation - Part 1 (15B)	
Voltage Limitation - Part 2 (15C)	
Earthing and Potential Equalization (18F)	

Leakage Current (19) Dielectric Voltage Withstand (20.4) Temperature (42) Humidity Preconditioning Treatment (44.5) Abnormal Operation and Fault Conditions (52) Transformer Overload and Short-Circuit (57.9.1) Working Voltage Measurement (20.3)
Summary of Compliance with National Differences: AT, AU, BE, BR, CA, CH, CS, CZ, DE, DK, FI, FR, GB, GR, HU, IE, IL, IN, IT, KE, KR, NL, NO, PL, PT, RU, SE, SI, SK, TR, UA, US

Copy of Marking Plate

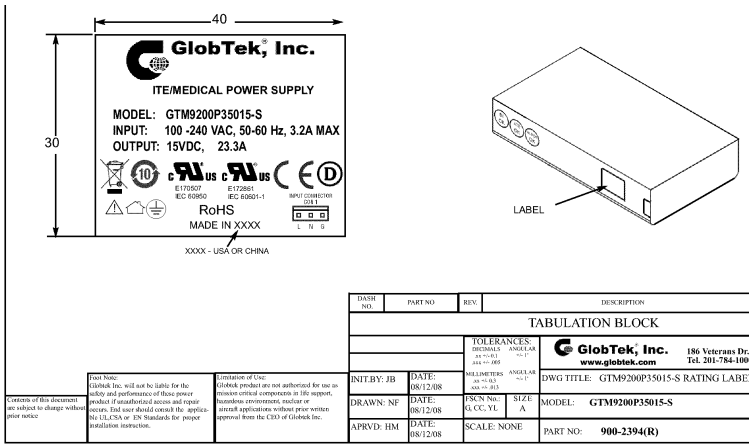

DASH NO.	PART NO	REV.	DESCRIPTION
			TABULATION BLOCK

TOLERANCES:
DECIMALS: .xx +/-0.1, .xxx +/- .005
ANGULAR +/- 1°
MILLIMETERS: .xx +/- 0.3, .xxx +/- .013
ANGULAR +/- 1°

GlobTek, Inc.
www.globtek.com
186 Veterans Dr.
Tel. 201-784-100

INIT.BY: JB	DATE: 08/12/08	DWG TITLE:	GTM9200P35015-S RATING LABE
DRAWN: NF	DATE: 08/12/08	FSCN No.: G, CC, YL / SIZE A	MODEL: GTM9200P35015-S
APRVD: HM	DATE: 08/12/08	SCALE: NONE	PART NO: 900-2394(R)

Contents of this document are subject to change without prior notice

Fair Note:
Globtek Inc. will not be liable for the safety and performance of those power product if unauthorized access and repair occurs. End user should consult the applica-ble UL,CSA or IN Standards for proper installation instruction.

Limitation of Use:
Globtek product are not authorized for use as mission critical components in life support, hazardous environment, nuclear or aircraft applications without prior written approval from the CEO of Globtek Inc.

Test item particulars :

Classification of installation and use .....:	For Building-in
Supply connection .....:	For Building-in
Accessories and detachable parts included in the evaluation .....:	None
Options included .....:	None

Possible test case verdicts:

- test case does not apply to the test object .....:	N / A
- test object does meet the requirement .....:	P(Pass)
- test object does not meet the requirement .....:	F(Fail)

Abbreviations used in the report:

- normal condition .....:	N.C.	- single fault condition .....:	S.F.C.
- operational insulation .....:	OP	- basic insulation .....:	BI
- basic insulation between parts of opposite polarity:	BOP	- supplementary insulation .....:	SI
- double insulation .....:	DI	- reinforced insulation .....:	RI

Testing:

Date(s) of receipt of test item .....:	2005-07-02, 2009-09-29, 2010-09-16
Date(s) of Performance of tests .....:	2005-09-08, 2009-10-13, 2010-10-28

General remarks:

The test results presented in this report relate only to the object tested.
This report shall not be reproduced, except in full, without the written approval of the Issuing testing laboratory.

List of test equipment must be kept on file and be available for review.

"(see Enclosure #)" refers to additional information appended to the report.
"(see appended table)" refers to a table appended to the report.

Throughout this report a point is used as the decimal separator.

GENERAL PRODUCT INFORMATION:

Report Summary

All applicable tests according to the referenced standard(s) have been carried out.

Product Description

The Model Series GTM9200 is a switch mode power supply series for building-in. The units are provided with an isolation transformer and associated circuitry mounted on a pwb. The units are provided with input and output connector headers, which mate to connectors within the end-use equipment.

Model Differences

Differences within the GTM9200 family are limited to minor component changes to determine specific output wattage, voltage and current parameters. The 9200 Series is the family model designation which is represented by the following generic nomenclature:

GT(M)9200P1853.3-X.X TO 35048-X.X where:
GT - designates GlobTek Series;
M - designates Medical Grade models with IEC 60601 safety approvals;
9200 - Family Designator
P - power factor correction;
1323.3 TO 20048 - 132W, 3.3V to 200W, 48V representing the range of Output power / Output Voltage respectively OR
1853.3 to 35048 - 185W, 3.3V to 350W, 48V representing the range of Output power / Output Voltage respectively;
X.X : Output Voltage deviation from standard model by subtracting X.X volts from standard output voltage in 0.1 volt increments;
May be followed by:
R - representing IEC input receptacle and output metal connector on board
S - representing input header and output metal connector on board
HIOXX - representing input and output wire harness. Where XXX may be between 000 and 999 (max. length for input is 100 mm and 200 mm for output)
HORXX - representing IEC input receptacle and output wire harness. Where XXX may be between 000 and 999 (max. length is 200 mm for output)
HOXXX - representing input header on board and output wire harness. Where XXX may be between 000 and 999 (max. length is 200 mm for output)
HIXXX - representing input wire harness and output metal terminal on board. Where XXX may be between 000 and 999 (max. length for input is 100 mm)

Standard Models:	Vdc and A	
GTM9200P1323.3-X.X-HIOXXX or -HORXXX or -HOXXX	3.3	40
GTM9200P2005-X.X-HIOXXX or -HORXXX or -HOXXX	5.0	40
GTM9200P2007.5-X.X-S or -R or -HIOXXX or -HORXXX or -HOXXX	7.5	26.67
GTM9200P2009-X.X-S or -R or -HIOXXX or -HORXXX or -HOXXX or -HIXXX	9.0	22.22
GTM9200P20012-X.X-S or -R or -HIOXXX or -HORXXX or -HOXXX or -HIXXX	12.0	16.67
GTM9200P20015-X.X-S or -R or -HIOXXX or -HORXXX or -HOXXX or -HIXXX	15.0	13.33
GTM9200P20018-X.X -S or -R or -HIOXXX or -HORXXX or -HOXXX or -HIXXX	18.0	11.11
GTM9200P20024-X.X-S or -R or -HIOXXX or -HORXXX or -HOXXX or -HIXXX	24.0	8.33
GTM9200P20036-X.X-S or -R or -HIOXXX or -HORXXX or -HOXXX or -HIXXX	36.0	5.55
GTM9200P20048-X.X-S or -R or -HIOXXX or -HORXXX or -HOXXX or -HIXXX	48.0	4.17
GTM9200P1853.3-X.X- [HIOXXX or HORXXX or HOXXX]	3.3	56
GTM9200P2313.3-X.X--S or -R or -HIXXX	3.3	70
GTM9200P3505-X.X-S or -R or -HIXXX	5.0	70.
GTM9200P3507.5-X.X-S or -R or -HIOXXX or -HORXXX or -HOXXX or -HIXXX	7.5	46.67
GTM9200P3509-X.X-S or -R or -HIOXXX or -HORXXX or -HOXXX or -HIXXX	9.0	38.89
GTM9200P35012-X.X-S or -R or -HIOXXX or -HORXXX or -HOXXX or -HIXXX	12.0	29.17
GTM9200P35015-X.X-S or -R or -HIOXXX or -HORXXX or -HOXXX or -HIXXX	15.0	23.33
GTM9200P35018-X.X-S or -R or -HIOXXX or -HORXXX or -HOXXX or -HIXXX	18.0	19.44
GTM9200P35024-X.X-S or -R or -HIOXXX or -HORXXX or -HOXXX or -HIXXX	24.0	14.58
GTM9200P35036-X.X-S or -R or -HIOXXX or -HORXXX or -HOXXX or -HIXXX	36.0	9.72
GTM9200P35048-X.X-S or -R or -HIOXXX or -HORXXX or -HOXXX or -HIXXX	48.0	7.29

Note - This nomenclature only covers models employing output ratings equivalent to or less than those listed in Standard Models table.

Additional Information

This report does not include the investigation or the test report for the triple insulated wire employed in the transformer. A test report for the triple insulated wire may be required when submitting this CB Test Report to a National Certification Body (NCB) for obtaining certification at national level.

For ITE Evaluation on the GTM series, see E170507-A10-UL/CB-2. Any changes made to this report should be considered in the ITE report.

The data from this report was originally produced and contained in CBTR Ref. No.E170507-A10-CB-1, dated 2005-10-11, CB Test Certificate Ref. No.US/9777/UL which is an IEC 60950-1, 1st Edition report for the same power supply series, but with additionally all applicable IEC 60601-1 requirements added into that report. Based on previously conducted testing and the previous review of product construction it was determined that the product continues to comply with the standard. The original data is included in the tables in this report. Additionally, the "Impairment of Cooling Tests" (52.5.5) and "Working Voltage Tests" (20.3) were performed.

Technical Considerations

- The product was investigated to the following additional standards: UL 60601-1, 1st Edition, 2006-04-26 (includes National Differences for USA), CAN/CSA-C22.2 No. 601.1-M90 (R2005) (includes National Differences for Canada), IEC 60601-1-1, EN 60601-1: 1990 + A1:1993 + A2:1995 (except EMC limitations, EN 60601-1-2, Biocompatibility, EN 10993-1, Programmable Electronic Systems, IEC 60601-1-4)

- The product was not investigated to the following standards or clauses: Clause 36, Electromagnetic Compatibility (IEC 601-1-2), Clause 48, Biocompatibility (ISO 10993-1), Clause 52.1, Programmable Electronic Systems (IEC 601-1-4)

- The degree of protection against harmful ingress of water is: Ordinary

- The mode of operation is: Continuous

- Software is relied upon for meeting safety requirements related to mechanical, fire and shock: No

- Additional single fault testing with alternate fuses listed in the Critical Component table were not considered necessary due to the examination of the fuse curves. --

- The product is UL Recognized only to the following hazards: Shock, Fire, Casualty --

Engineering Conditions of Acceptability

When installed in an end-product, consideration must be given to the following:

- The series was submitted and evaluated for use at the maximum ambient temperature (Tma) permitted by , the manufacturer's specification of: 60°C for the 132W - 200 W Model GTM9200 Series at 100% load and 70°C for 185W - 350W Model GTM-9200 Series at 100% load. See Enclosure 7-01 and 7-02 for derating curves. --

- When installed in an end-product, consideration must be given to the following: Leakage current, temperature, grounding, and dielectric tests should be repeated. --

- Double/Reinforced insulation is provided between the primary and output of the power supply. Basic insulation is provided between primary and the enclosure. --

- The power supplies covered by this report are components, which are intended for use in end-use products used in a hospital or related health care facility, evaluated to the Standard for Medical Equipment. --

- The power supplies have been evaluated as Class I, continuous operation, ordinary equipment and have not been evaluated for use in the presence of a flammable anaesthetic mixture with air, oxygen or nitrous oxide. --

- The output circuits have not been evaluated for direct patient connection (Type B, BF, or CF). --

- The following end-product enclosures are required: Electrical, Fire. --

- The power supplies utilize both input/output connectors and output terminal blocks. The input/output connectors have not been evaluated for field connections and are only intended for connection to mating connectors of internal wiring inside the end-use product. The acceptability of these mating connectors relative to secureness, insulating materials and temperatures should be considered. --

- This power supplies are for building-in to an end product. Connectors within the end product provide the method of disconnection from the input source. --

- The maximum investigated branch circuit rating is: 20 A --

Factory Location(s):

GLOBTEK INC
186 VETERANS DR
NORTHVALE NJ 07647
UNITED STATES

GLOBTEK (SUZHOU) CO LTD
BLDG 4, #76
JINLING EAST RD
SUZHOU PARK
SUZHOU
JIANGSU 215021 CHINA

Attachments to Test Report

National Differences (11 pages)

Enclosures (210 pages)

IEC 60601			
Clause	Requirement + Test	Result - Remark	Verdict

3	**GENERAL REQUIREMENTS**		Pass
3.1	Equipment when transported, stored, installed, operated in normal use and maintained according to the instructions of the manufacturer, causes no safety hazard which could reasonably be foreseen and which is not connected with its intended application in normal condition (N.C.) and in single fault condition (S.F.C.)		Pass
3.4	An alternative means of construction is used to that detailed in this standard and it can be demonstrated that an equivalent degree of safety is obtained		N/A

IEC 60601			
Clause	Requirement + Test	Result - Remark	Verdict

5	**CLASSIFICATION**		Pass
5.1	Type of protection against electric shock		Pass
	Class I equipment		Pass
	Class II equipment		N/A
	Internally powered equipment		N/A
5.2	Degree of protection against electric shock		Pass
	Type B applied part		N/A
	Type BF applied part		N/A
	Type CF applied part		N/A
	Not classified - no applied parts		Pass
5.3	Classification according to the degree of protection against ingress of water as detailed in the current edition of IEC 529 (see 6.1.1)..... :	Unit intended for building-in. To be determined in the end product application.	N/A
5.4	Methods of sterilization or disinfection		N/A
5.5	Equipment not suitable for use in the presence of flammable mixtures		N/A
	Category AP equipment		N/A
	Category APG equipment		N/A
5.6	Mode of operation:		Pass
	-continuous operation		Pass
	-short-time operation, specified operation; period. :		-
	-intermittent operation, specified operation; rest period..... :		-
	-continuous operation with short-time, stated permissible loading time..... :		-
	-continuous operation with intermittent, stated permissible loading/rest time..... :		-

IEC 60601			
Clause	Requirement + Test	Result - Remark	Verdict

INSULATION DIAGRAM

Insulation Diagram for Power Supply

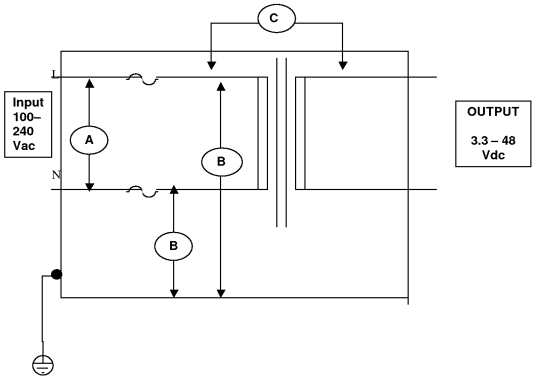

A: BOP - Basic Opposite Polarity
B: Basic Insulation
C: Reinforced Insulation

IEC 60601			
Clause	Requirement + Test	Result - Remark	Verdict

	TABLE: to insulation diagram						
Area	Insulation type: operational / basic / supplementary / double / reinforced	Reference voltage (V)	Required creepage (mm)	Required clearance (mm)	Measured creepage (mm)	Measured clearance (mm)	Remarks
A	BOP (Basic Opposite Polarity)	240 Vac	3.0	1.6	4.5	3.0	Pass
B	Basic	240 Vac	4.0	2.5	4.5	3.0	Pass
C	Reinforced - Transformer (T1) and PFC Choke (L6)	240V	-	-	-	-	Pass - Triple Insulated wire employed in T1 and L6 with flying leads
C	Reinforced - Primary to Secondary on PWB	240V	8.0	5.0	9.0	5.5	Pass

INSULATION DIAGRAM CONVENTIONS

Insulation diagram is a graphical representation of equipment insulation barriers, protective impedance and protective earthing. If feasible, use the following conventions to generate the diagram:

1. All isolation barriers are identified by letters between separate parts of diagram, for example separate transformer windings, optocouplers, wire insulation, creepage and clearance distances.
2. Parts connected to earth with large dots are protectively earthed. Other connections to earth are functional.
3. Applied parts are extended beyond the equipment enclosure and terminated with an arrow.
4. Parts accessible to the operator only are extended outside of the enclosure, but are not terminated with an arrow.
5. Blocks containing the letter "Z" indicate protective impedance.
6. Operational Insulation (OP) - indicates insulation that may be required for function of the equipment, but is not required or relied on for compliance with the requirements of clauses 17, 20 and 57.

IEC 60601			
Clause	Requirement + Test	Result - Remark	Verdict

6	**IDENTIFICATION, MARKING AND DOCUMENTS**		Pass
6.1	Marking on the outside of equipment or equipment parts		Pass
6.1c	Markings of the specific power supply affixed		N/A
6.1d	If marking is not practicable due to size or nature of enclosure, information is included in accompanying documents		N/A
6.1e	Name and/or trademark of the manufacturer or supplier ..... :	Refer to Models and Ratings area of Report.	Pass
6.1f	Model or type reference..... :	Refer to Models and Ratings area of Report.	Pass
6.1g	Rated supply voltages or voltage range(s)		Pass
	Number of phases ..... :		N/A
	Type of current ..... :	Refer to Models and Ratings area of Report.	Pass
6.1h	Rated frequency or rated frequency range(s) (Hz) :	Refer to Models and Ratings area of Report.	Pass
6.1j	Rated power input (VA, W or A) ..... :	Refer to Models and Ratings area of Report.	Pass
6.1k	Power output of auxiliary mains socket - outlets		N/A
6.1l	Class II symbol		N/A
	Symbol for degree of protection against ingress of water provided ..... :		N/A
	Symbol for protection against electric shock ..... :		N/A
	If equipment has more than one applied part with different degrees of protection, the relevant symbols are clearly marked on such applied parts, or on or near relevant outlets		N/A
	Symbol for protection of defibrillation-proof applied parts		N/A
	Symbol 14 from Table DI for defibrillation-proof with protection partly in patient cable		N/A
6.1m	Mode of operation (if no marking, suitable for continuous operation)		Pass
6.1n	Types and rating of external accessible fuses ..... :		N/A
6.1p	Ratings of external output:..... :		N/A
6.1q	Symbol for physiological effect(s):		N/A
	- attention, consult accompanying documents		N/A
	- non-ionizing radiation, or symbols as adopted by ISO or IEC 417		N/A

IEC 60601			
Clause	Requirement + Test	Result - Remark	Verdict
6.1r	Anaesthetic-proof symbol: AP or APG ..... :		N/A
6.1s	Dangerous voltage symbol		N/A
6.1t	Special cooling requirements		N/A
6.1u	Limited mechanical stability	For building in	N/A
6.1v	Protective packing requirement(s)		N/A
	- Marking(s) for unpacking safety hazard(s)		N/A
	- Equipment or accessories supplied sterile, marked as sterile		N/A
6.1y	Potential equalization terminal		N/A
	- Functional earth terminal		N/A
6.1z	Removable protective means		N/A
	Durability of marking test		N/A
6.2	Marking on the inside of equipment or equipment parts		Pass
6.2a	Nominal voltage of permanently installed equipment		N/A
6.2b	Maximum power loading for heating elements or holders for heating lamps		N/A
6.2c	Dangerous voltage symbol		N/A
6.2d	Type of battery and mode of insertion		N/A
	- Marking referring to accompanying documents used for battery not intended to be changed by the operator		N/A
6.2e	Fuses accessible with a tool identified either by type and rating or by a reference to diagram		Pass
6.2f	Protective earth terminal		Pass
6.2g	Functional earth terminal		N/A
6.2h	Supply neutral conductor in permanently installed equipment (N)		N/A
6.2j	Markings required in 6.2 f), h), k), and l) remain visible after connection and are not affixed to parts which have to be removed	For building in	N/A
	- Markings comply with IEC 445		N/A
6.2k	For permanently connected devices the supply connections are clearly marked adjacent to the terminals (or in accompanying documents for small equipment)		N/A
6.2l	Statement for suitable wiring materials at temperatures over 75°C		N/A

IEC 60601			
Clause	Requirement + Test	Result - Remark	Verdict
6.2n	Capacitors and/or circuit parts marked as required in Sub-clause 15c		N/A
6.3	Marking of controls and instruments		N/A
6.3a	Mains switch clearly identified		N/A
	- ON and OFF positions marked according to Symbols 15 and 16 of table D1 or indicated by an adjacent indicator light		N/A
6.3b	Indication of different positions of control devices and switches		N/A
6.3c	Indication of the direction in which the magnitude of the function changes, or an indicating device		N/A
6.3f	The functions of operator controls and indicators are identified		N/A
6.3g	Numeric indications of parameters are in SI units except for units listed in Am. 2		N/A
6.4	Symbols		Pass
	Used symbols comply with Appendix D or IEC 417 and/or IEC 878 or ISO publications (if applicable)		Pass
6.5	Colors of the insulation of conductors		N/A
6.5a	Protective earth conductor has green/yellow insulation		N/A
6.5b	All insulations of internal protective earth conductors are green/yellow at least at their terminations		N/A
6.5c	Only protective or functional earthing, or potential equalization conductors are green/yellow		N/A
6.5d	Color of neutral conductor ..... :		N/A
6.5e	Colors of phase conductor(s) ..... :		N/A
	- Compliance with IEC 227 and IEC 245		N/A
6.5f	Additional protective earthing in multi-conductor, cords are marked green/yellow at the ends of the additional conductors		N/A
6.6	Medical gas cylinders and connections		N/A
6.6a	In accordance with ISO ISO/R 32		N/A
6.6b	Identification of connection point		N/A
6.7	Indicator lights and push-buttons		Pass
6.7a	Red indicator lights used exclusively to indicate a warning of danger and/or a need for urgent action		N/A
	- Yellow used to indicate caution or attention		N/A

IEC 60601			
Clause	Requirement + Test	Result - Remark	Verdict
	required		
	- Green used to indicate ready for action	This product contains only visible indicator LEDs (Class 1) operating in the range of 400 - 700 nm wavelength. No IEC60825-1 evaluation was deemed necessary. Additional review may be required at the discretion of the accepting NCB. See Enclosure Misc. for Spec sheets.	Pass
6.7b	Color red used only for push-buttons by which a function is interrupted in case of emergency		N/A
6.8	ACCOMPANYING DOCUMENTS		Pass
6.8.1	Equipment accompanied by documents containing at least instructions for use, a technical description and an address to which the user can refer	For building -in. Provided with a Specification Sheet to End Product Manufacturer	Pass
	Classifications specified in Clause 5 included in both the instructions for use and the technical description		N/A
	Markings specified in Sub-clause 6.1 included in the accompanying documents if they have not been permanently affixed to equipment		N/A
	Warning statements and the explanation of warning symbols provided in the accompanying documents		N/A
6.8.2	Instructions for use		N/A
6.8.2a	General information provided in instructions for use		N/A
	- state the function and intended application of the equipment		N/A
	- include an explanation of: the function of controls, displays and signals		N/A
	- the sequence of operation		N/A
	- the connection and disconnection of detachable parts and accessories		N/A
	- the replacement of material which is consumed during operation		N/A
	- information regarding potential electromagnetic or other interference and advice regarding avoidance		N/A
	- include: indications of recognized accessories, detachable parts and materials, if the use of other parts or materials can degrade minimum safety		N/A
	- instructions concerning cleaning, preventive		N/A

IEC 60601			
Clause	Requirement + Test	Result - Remark	Verdict
	inspection and maintenance to be performed including the frequency of such maintenance		
	General information provided in instructions:		N/A
	- information for the safe performance of routine maintenance		N/A
	- parts on which preventive inspection and maintenance shall be performed by other persons including the periods to be applied		N/A
	- explanation of figures, symbols, warning statements and abbreviations on the equipment		N/A
6.8.2c	Signal output or signal input parts intended only for connection to specified equipment described		N/A
6.8.2d	Details about acceptable cleaning, disinfection or sterilization methods included		N/A
6.8.2e	Warning statement for mains operated equipment with additional power source		N/A
6.8.2f	A warning to remove primary batteries if equipment is not likely to be used for some time		N/A
6.8.2g	Instructions to ensure safe use and adequate maintenance of rechargeable batteries		N/A
6.8.2h	Identification of specified external power supplies or battery chargers necessary to ensure compliance with the requirements of IEC 601-1		N/A
6.8.2j	Identification of any risks associated with the disposal of waste products, residues, etc.		N/A
	- Advice in minimizing these risks		N/A
6.8.3	Technical description		N/A
6.8.3a	All characteristics essential for safe operation provided		N/A
6.8.3b	Required type and rating of fuses utilized in the mains supply circuit external to permanently installed equipment		N/A
	- Instructions for replacement of interchangeable and/or detachable parts which are subject to deterioration during normal use		N/A
6.8.3c	Instructions or reference information for repair of equipment parts designated by the manufacturer as repairable provided		N/A
6.8.3d	Environmental conditions for transport and storage specified in accompanying documents and marked on packaging		N/A

IEC 60601			
Clause	Requirement + Test	Result - Remark	Verdict

7	**POWER INPUT**		Pass
	Power Input Measurements		Pass

10	**ENVIRONMENTAL CONDITIONS**		Pass
10.1	Equipment is capable while packed for transport or storage of being exposed to the conditions stated by the manufacturer		Pass
10.2.2a	Rated voltage not exceeding 250 V for hand-held equipment		N/A
	Rated voltage not exceeding 250 V d.c. or single-phase a.c. or 500 V polyphase a.c. for equipment up to 4kVA		Pass
	Rated voltage not exceeding 500 V for all other equipment		N/A
	Rated input frequency not more than 1kHz		Pass
10.2.2b	Internal replaceable electrical power source specified		N/A

14	**REQUIREMENTS RELATED TO CLASSIFICATION**		Pass
14.4a	Class I and Class II equipment in addition to basic insulation provided with an additional protection		Pass
14.4b	Equipment supplied from external dc source of reverse polarity results in no safety hazard		N/A
14.5a	Dual classification for internally powered equipment with a means of connection to supply mains		N/A
14.5b	Internally powered equipment complies with requirements for Class I or Class II equipment while connected to supply mains, and with requirements for internally powered equipment when not connected		N/A
14.6c	Applied parts intended for direct cardiac application are of type CF		N/A

IEC 60601			
Clause	Requirement + Test	Result - Remark	Verdict

15	**LIMITATION OF VOLTAGE AND/OR ENERGY**		Pass
15b	Voltage measured one sec after disconnection of the mains plug does not exceed 60V	At one second, the following voltages were measured: Line to Neutral = <0.1 V peak; Line to Protective Earth = <0.1 V peak; Neutral to Protective Earth = 5 V peak;	Pass
15c	For live parts accessible after equipment has been de-energized the residual voltage does not exceed 60 V nor residual energy exceed 2 mJ		Pass
	Marking provided for manual discharging		N/A

16	**ENCLOSURES AND PROTECTIVE COVERS**	N/A

IEC 60601			
Clause	Requirement + Test	Result - Remark	Verdict

17	**SEPARATION**		Pass
17a	Separation method of the applied part from live parts:		N/A
	1) basic insulation: applied part earthed	No applied parts.	N/A
	2) by protectively earthed conductive part (e.g. screen)		N/A
	3) by separate earthed intermediate circuit limiting leakage current to applied part in event of insulation failure		N/A
	4) by double or reinforced insulation		N/A
	5) by protective impedances limiting current to applied part		N/A
	- Additional leakage current test in single fault conditions		N/A
17c	There is no conductive connection between applied parts and accessible conductive parts which are not protectively earthed		N/A
17d	Supplementary insulation between hand-held flexible shafts and motor shafts (Class I)		N/A
17g	Separation method of accessible parts other than applied parts from live parts:		Pass
	1) basic insulation: accessible part earthed	Power Suppy Enclosure	Pass
	2) by protectively earthed conductive part (e.g. screen)		N/A
	3) by separate earthed intermediate circuit limiting leakage current to enclosure in event of insulation failure		N/A
	4) by double or reinforced insulation		Pass
	5) by protective impedances limiting current to accessible part		N/A
	- Additional leakage current test in single fault conditions		N/A
17h	Arrangements used to isolate defibrillation-proof applied parts so designed that:		N/A
	- no hazardous electrical energies appear during a discharge of a cardiac defibrillator		N/A
	- after exposure to the defibrillation voltage, the equipment continues to perform its intended function		N/A

IEC 60601			
Clause	Requirement + Test	Result - Remark	Verdict
18	**PROTECTIVE EARTHING, FUNCTIONAL EARTHING AND POTENTIAL EQUALIZATION**		Pass
18a	Accessible parts of Class I equipment separated from live parts by basic insulation connected to the protective earth terminal	Unit for building in. Enclosure is earthed.	Pass
18b	Protective earth terminals suitable for connection to the protective earth conductor		Pass
18e	Potential equalization conductor		N/A
	- Readily accessible		N/A
	- Accidental disconnection prevented in normal use		N/A
	- Conductor detachable without the use of a tool		N/A
	- Power supply cord does not incorporate a potential equalization conductor		N/A
	- Connection means marked with Symbol 9, Table DI		N/A
18f	For equipment without power supply cord, impedance between protective earth terminal and accessible metal part <= 0.1 Ohm	Unit is intended for building-in; to be determined in the end product. Test conducted from earthing tab (pin) of unit to the farthest point away on the chassis. Test conditions: 40A (12Vac source), for 2 minutes. Calculated resistance = 0.0238 Ohms.	Pass
	- For equipment with an appliance inlet, impedance between protective earth contact and any accessible metal part <= 0.1 Ohm		N/A
	- For equipment with a non-detachable power supply cord, impedance between protective earth pin in mains plug and accessible metal part <= 0.2 Ohm		N/A
18g	If the impedance of protective earth connections other than in Cl. 18 f) exceeds 0.1 Ohm, the allowable value of the enclosure leakage current is not exceeded in single fault condition		N/A
18k	Functional earth terminal not used to provide protective earthing		N/A
18l	Class II equipment with isolated internal screens		N/A
	- insulation of screens and all internal wiring connected to them is double insulation or reinforced insulation		N/A
	- functional earth terminal clearly marked		N/A

IEC 60601			
Clause	Requirement + Test	Result - Remark	Verdict
	- explanation of functional earth terminal provided in the accompanying documents		N/A
19	**CONTINUOUS LEAKAGE CURRENTS AND PATIENT AUXILIARY CURRENTS**		Pass
19.1b	Leakage currents		Pass
	- earth leakage current		Pass
	- enclosure leakage current		N/A
	- patient leakage current		N/A
	- patient auxiliary current		N/A
20	**DIELECTRIC STRENGTH**		Pass
	Overall compliance with Clause 20		Pass
21	**MECHANICAL STRENGTH**		N/A
22	**MOVING PARTS**		N/A
23	**SURFACES, CORNERS AND EDGES**		Pass
	Rough surfaces, sharp corners and edges which may cause injury or damage avoided or covered		Pass
24	**STABILITY IN NORMAL USE (see appended table 24)**		N/A
25	**EXPELLED PARTS**		N/A
28	**SUSPENDED MASSES**		N/A
29	**X-RADIATION**		N/A
36	**ELECTROMAGNETIC COMPATIBILITY**		N/A

IEC 60601			
Clause	Requirement + Test	Result - Remark	Verdict

37	**COMMON REQUIREMENTS FOR CATEGORY AP AND CATEGORY APG EQUIPMENT**	N/A

42	**EXCESSIVE TEMPERATURES**		Pass
42.1	Equipment does not attain temperatures exceeding the values given in Table Xa over the range of ambient temperatures per Clause 10.2.1		Pass
42.2	Equipment does not attain temperatures exceeding the values given in Table Xb at 25°C ambient		Pass
42.3	Applied parts not intended to supply heat have surface temperatures not exceeding 41°C		N/A
42.5	Guards to prevent contact with hot surfaces removable only with a tool		N/A

43	**FIRE PREVENTION**		Pass
	Strength and rigidity necessary to avoid a fire hazard		Pass

IEC 60601			
Clause	Requirement + Test	Result - Remark	Verdict
44	**OVERFLOW, SPILLAGE, LEAKAGE, HUMIDITY, INGRESS OF LIQUIDS, CLEANING, STERILIZATION AND DISINFECTION**		Pass
44.2	Equipment contain a liquid reservoir:		N/A
	- the equipment is electrically safe after 15% overfill steadily over a period of 1 min		N/A
	- transportable equipment is electrically safe after additionally having been tilted through an angle of 15° in the least favorable direction(s) (if necessary with refilling)		N/A
44.3	Electrical properties of the equipment do not change in connection of spillage test (200 ml of water)		N/A
44.4	Liquid which might escape in a single fault condition does not wet parts which may cause a safety hazard		N/A
44.5	Equipment sufficiently protected against the effects of humidity		Pass
44.6	Enclosures designed to give a protection against harmful ingress of water classified according to IEC Publication 529	Ordinary protection (IPX0) considered. Other IP must be considered in the end use.	N/A
44.7	Equipment capable of withstanding cleaning, sterilization or disinfection without deterioration of safety provisions		N/A
45	**PRESSURE VESSELS AND PARTS SUBJECT TO PRESSURE**		N/A
48	**BIOCOMPATIBILITY**		N/A
49	**INTERRUPTION OF THE POWER SUPPLY**		N/A
51	**PROTECTION AGAINST HAZARDOUS OUTPUT**		N/A

IEC 60601			
Clause	Requirement + Test	Result - Remark	Verdict

52	**ABNORMAL OPERATION AND FAULT CONDITIONS**		Pass
52.1	Equipment is so designed and manufactured that even in single fault condition no safety hazard as described under 52.4 exists (see 3.1 and Cl. 13)		Pass
	The safety of equipment incorporating programmable electronic systems is checked by applying IEC 601-1-4		N/A
52.5.2	Failure of thermostats presents no safety hazards		N/A
52.5.3	Short-circuiting of either part of double insulation presents no safety hazard		Pass
52.5.5	Impairment of cooling: temperatures not exceeding 1.7 times the values of Clause 42 minus 17.5°C		Pass
52.5.6	Locking of moving parts presents no safety hazard	Fan Motor UL R/C	Pass
52.5.7	Interruption and short-circuiting of motor capacitors presents no safety hazard		N/A
52.5.8	Duration of motors locked rotor test in compliance with Cl. 52.5.8		N/A
52.5.9	Failure of one component at a time presents no safety hazard		Pass
52.5.10	Overload of heating elements presents no safety hazard		N/A
52.5.10f	Motors intended to be remotely controlled, automatically controlled, or liable to be operated continuously provided with running overload protection		N/A
52.5.10h	Equipment with three-phase motors can safely operate with one phase disconnected		N/A

IEC 60601			
Clause	Requirement + Test	Result - Remark	Verdict

56	**COMPONENTS AND GENERAL ASSEMBLY**		Pass
	List of critical components		Pass
56.1b	Ratings of components not in conflict with the conditions of use in equipment		Pass
	Ratings of mains components are identified		Pass
56.1d	Components, movements of which could result in a safety hazard mounted securely		Pass
56.1f	Conductors and connectors secured and/or insulated to prevent accidental detachment resulting in a safety hazard		Pass
56.3a	Connectors provide separation required by Sub-clause 17g		N/A
	Plugs for connection of patient circuit leads can not be connected to other outlets on the same equipment		N/A
	Medical gas connections not interchangeable		N/A
56.3b	Accessible metal parts can not become live when detachable interconnection cord between different parts of equipment is loosened or broken		N/A
56.3c	Leads with conductive connection to a patient are constructed such that no conductive connection remote from the patient can contact earth or hazardous voltages.		N/A
56.4	Connections of capacitors		Pass
	Not connected between live parts and non-protectively earthed accessible parts		Pass
	If connected between mains part and protectively earthed metal parts comply with: IEC Publication 384-14		Pass
	Enclosure of capacitors connected to mains part and providing only basic insulation, is not secured to non-protectively earthed metal parts		Pass
	Capacitors or other spark-suppression devices are not connected between contacts of thermal cut-outs		N/A
56.5	Protective devices which cause disconnection from the supply mains by producing a short-circuit not provided in equipment		Pass
56.6	Temperature and overload control devices		N/A
56.6a	Thermal cut-outs which have to be reset by a soldering not fitted in equipment		N/A

IEC 60601			
Clause	Requirement + Test	Result - Remark	Verdict
	Thermal safety devices provided where necessary to prevent operating temperatures exceeding the limits		N/A
	Audible warning provided where the loss of function caused by operation of a thermal cut-out presents a safety hazard		N/A
	Self-resetting thermal cut-outs and self-resetting over-current releases operated 200 times		N/A
	Non-self resetting over-current releases operated 10 times		N/A
	Independent non-self-resetting thermal cut-out provided where a failure of a thermostat could constitute a safety hazard		N/A
56.6b	Thermostats with varying temperature settings clearly indicated		N/A
	Operating temperature of thermal cut-outs indicated		N/A
56.7	Batteries		N/A
56.7a	Battery compartments:		N/A
	- adequately ventilated		N/A
	- accidental short-circuiting is prevented		N/A
56.7b	Incorrect polarity of connection prevented		N/A
56.8	Indicators - unless indication provided by other means (from the normal operation position), indicator lights are used (color see 6.7):		N/A
	- to indicate that equipment is energized		N/A
	- to indicate the operation of non-luminous heaters if a safety hazard could result		N/A
	- to indicate when output exists if a safety hazard could result		N/A
	- charging mode indicator provided		N/A
56.10	Actuating parts of controls		N/A
56.10b	Actuating parts are adequately secured to prevent them from working loose during normal use		N/A
	Controls are secured to prevent the movement relative to scale marking (safety related only)		N/A
	Detachable indicating devices are prevented from incorrect connection without the use of tool		N/A
56.10c	Stops are provided on rotating controls:		N/A
	- to prevent an unexpected change from maximum		N/A

IEC 60601			
Clause	Requirement + Test	Result - Remark	Verdict
	to minimum or vice versa where this could produce a safety hazard		
	- to prevent damage to wiring		N/A
56.11	Cord-connected hand-held and foot-operated control devices		N/A
56.11a	Contain voltages not exceeding 25 V a.c. or 60 V d.c. and isolated from the mains part by Cl. 17g		N/A
56.11b	Hand-held control devices comply with the requirement and test of Sub-clause 21.5		N/A
	- Foot-operated control devices designed to support the weight of an adult human being		N/A
56.11c	Devices not change their setting when inadvertently placed		N/A
56.11d	Foot-operated control devices are at least IPX 1		N/A
	- For surgical use, electrical switching parts are IPX 8		N/A
56.11e	Adequate strain relief at the cord entry provided		N/A

IEC 60601			
Clause	Requirement + Test	Result - Remark	Verdict

57	**MAINS PARTS, COMPONENTS AND LAYOUT**		Pass
57.1	Isolation from supply mains		N/A
57.1a	Equipment provides means to isolate its circuits electrically from the supply mains on all poles simultaneously	For Building in	N/A
	Means for isolation incorporated in equipment or, if external, specified in the accompanying documents		N/A
57.1d	Switches used to comply with Sub-clause 57.1a comply with the creepage distances and air clearances as specified in IEC Publication 328		N/A
57.1f	Mains switches not incorporated in a power supply cord		N/A
57.1h	Appliance couplers and flexible cords with mains plugs provide compliance with Sub-clause 57.1a		N/A
57.1m	Fuses and semiconductor devices not used as isolating devices		N/A
57.2	Mains connectors and appliance inlets		N/A
57.2e	Auxiliary mains socket-outlets on non-permanently installed equipment of a type that cannot accept a mains plug		N/A
57.2g	Unless functional earth needs to be provided, Class I appliance inlet is not used in Class II equipment		N/A
57.3	Power supply cords		N/A
57.3a	Not more than one connection to a particular supply mains		N/A
	If alternative supply allowed, no safety hazards when more than one connection is made simultaneously		N/A
	The mains plug has only one power supply cord		N/A
	Non-permanently connected equipment provided with power supply cord or appliance inlet		N/A
57.3b	Power supply cords sufficiently robust to comply with the requirements of IEC 227, designation 53 and IEC 245, designation 53		N/A
	Polyvinyl chloride insulated power supply cords not used for equipment having external metal parts with a temperature exceeding 75°C		N/A
57.3c	Nominal cross-sectional area of conductors of power supply cords not less than in Table XV		N/A
57.3d	Stranded conductors not soldered if fixed by any		N/A

IEC 60601			
Clause	Requirement + Test	Result - Remark	Verdict
	clamping means		
57.4	Connection of power supply cords		N/A
57.4a	Cord anchorages		N/A
	Equipment provided with power supply cords has cord anchorages such that the conductors are relieved from strain, including twisting		N/A
	Tying the cord into a knot or tying the ends with string not used		N/A
	Cord anchorages made of insulating material or metal insulated from unearthed accessible metal parts by supplementary insulation		N/A
	Cord anchorages made of metal provided with an insulating lining		N/A
	Clamping screws do not bear directly on the cord insulation		N/A
	Screws associated with cable replacement are not used to secure other components		N/A
	Conductors of the power supply cord arranged that the protective earth conductor is not subject to strain as long as the phase conductors are in contact with their terminals		N/A
57.4b	Power supply cord protected against excessive bending		N/A
57.4c	Adequate space inside equipment to allow the supply cable conductors to be introduced and connected		N/A
57.5	Mains terminal devices and wiring of mains part		N/A
	Mains connected equipment other than those with a detachable supply cord provided with mains terminals, where connections are made with screws, nuts or equally effective methods		N/A
	If a conductor breaks away, barriers are provided such that creepage distances and air clearances cannot be reduced		N/A
	Screws and nuts which clamp external conductors not serve to fix any other component		N/A
57.5b	Terminals closely grouped with any protective earth terminal		N/A
	Mains terminal devices accessible only with use of a tool		N/A
	Mains terminal devices located or shielded that,		N/A

IEC 60601			
Clause	Requirement + Test	Result - Remark	Verdict
	should a wire of a stranded conductor escape when the conductors are fitted, there is no risk of accidental contact		
57.5c	Internal wiring not subjected to stress when the means for clamping the conductors are tightened or loosened		N/A
57.5d	Cord terminals not require special preparation of the conductor		N/A
57.6	Mains fuses and overcurrent releases		Pass
	Fuses or over-current releases provided accordingly for Class I and Class II		Pass
	Current rating of mains fuses and over-current releases such that they reliably carry the normal operating current		Pass
	Protective earth conductor not fused		Pass
	Neutral conductor not fused for permanently installed equipment	Component power supply	N/A
57.8	Wiring of the mains part		Pass
57.8a	Individual conductor in the mains part with insulation not at least electrically equivalent to that of the individual conductors of flexible supply cords complying with IEC Publications 227 or 245, treated as bare conductor		N/A
57.8b	Cross-sectional area of conductors up to protective device not less than the minimum required for the power supply cord		N/A
	Cross-sectional area of other wiring and the sizes of tracks on printed wiring circuits sufficient to prevent any fire hazard		Pass
57.9	Mains supply transformers		Pass
57.9.1	Overheating		Pass
	External to the transformer protective devices connected in such a way that failure of any component cannot render the protective devices inoperative		Pass
57.9.1a	Short-circuit of secondary windings not caused excessive temperature		Pass
57.9.1b	Overload of secondary windings not caused excessive temperature		Pass
57.9.2	The dielectric strength of the electrical insulation of a mains supply transformer such that it passes tests		N/A

IEC 60601			
Clause	Requirement + Test	Result - Remark	Verdict
57.9.4	Construction		Pass
57.9.4a	Separation of primary and secondary windings		Pass
	- separate bobbins or formers		N/A
	- one bobbin with insulating partition		N/A
	- one bobbin with concentric windings and having copper screen with a thickness of not less than 0.13 mm		N/A
	- concentrically wound on one bobbin with windings separated by double insulation		Pass
57.9.4c	Means provided to prevent displacement of end turns		Pass
57.9.4d	Insulated overlap of not less than 3 mm if a protective earthed screen has only one turn		N/A
57.9.4e	Insulation between the primary and secondary in transformers with double insulation		Pass
	- 1 insulation layer having a thickness of at least 1 mm		N/A
	- at least 2 insulation layers with a total thickness of at least 0.3 mm		N/A
	- three layers provided that each combination of two layers can withstand the dielectric strength test for reinforced insulation		Pass
57.9.4g	Exit of the wires of toroidal transformers provided with double sleeving complying with requirements for double insulation and having total thickness at least 0.3 mm extending at least 20 mm outside the winding		N/A
57.10	Creepage distances and air clearances		Pass
57.10a	Values: compliance with at least the values of Table XVI		Pass
	Creepage distances for slot insulation of motors at least 50% of the specified values		N/A
57.10b	Minimum creepage distances and air clearances in the mains part between parts of opposite polarity not required if short-circuiting does not produce a safety hazard		Pass
57.10c	Creepage distances or clearances of at least 4 mm are maintained between defibrillation-proof applied parts and other parts		N/A

IEC 60601			
Clause	Requirement + Test	Result - Remark	Verdict

58	**PROTECTIVE EARTHING - TERMINALS AND CONNECTIONS**		Pass
58.1	Clamping means of the protective earth terminal		N/A
	Not be able to loosen without the aid of a tool		N/A
	Screws for internal earth connections are covered or protected against loosening from outside		N/A
58.7	Earth pin of the appliance inlet regarded as the protective earth terminal		N/A
58.8	The protective earth terminal not used for the mechanical connection or the fixing of any component not related to earthing		N/A
58.9	Where the protective earth connections are made via a plug or socket device the protective earth connection is made before and interrupted after the supply connections during connection and interrupting		N/A

IEC 60601			
Clause	Requirement + Test	Result - Remark	Verdict

59	**CONSTRUCTION AND LAYOUT**		Pass
59.1	Internal wiring		N/A
59.1a	Cables and wiring protected against contact with a moving part		N/A
	Wiring having basic insulation only protected by additional fixed sleeving		N/A
	Components are not likely to be damaged in the normal assembly or replacement of covers		N/A
59.1b	Movable leads are not bent around a radius of less than five times the outer diameter of the lead		N/A
59.1c	Insulating sleeving adequately secured		N/A
	If the sheath of a flexible cable or cord is used as supplementary insulation it complies with requirements of IEC 227 and IEC 245 and dielectric test		N/A
	Conductors subjected to temperatures exceeding 70°C have an insulation of heat-resistant material		N/A
59.1d	Aluminum wires of less than 16 mm2 cross-section not used		N/A
59.1f	Connecting cords between equipment parts considered as belonging to the equipment		N/A
59.2	Insulation		Pass
59.2b	Mechanical strength and resistance to heat and fires retained by all types of insulation		Pass
59.2c	Insulation not likely to be impaired by deposition of dirt or by dust resulting from wear of parts	To be deteremined in the end product.	N/A
	Parts of rubber resistant to ageing		N/A
59.3	Excessive current and voltage protection		Pass
	Internal electrical power source provided with device for protection against fire hazard		Pass
	Fuse elements replaceable without opening the enclosure fully enclosed in a fuseholder		N/A
	Protective devices between an isolated applied part and the body of the equipment do not operate below 500 V r.m.s.		N/A
59.4	Oil containers		N/A
	Oil containers adequately sealed		N/A
	Container allow for the expansion of the oil		N/A
	Oil containers in mobile equipment sealed to		N/A

IEC 60601			
Clause	Requirement + Test	Result - Remark	Verdict

	prevent the loss of oil during transport		
	Partially sealed oil-filled equipment or equipment parts provided with means for checking the oil level		N/A

IEC 60601			
Clause	Requirement + Test	Result - Remark	Verdict

6.1	**TABLE: marking durability**	N/A
Marking tested	Remarks	
supplementary information:		

IEC 60601			
Clause	Requirement + Test	Result - Remark	Verdict

7	**TABLE: power input**				Pass
Operating condition	Voltage (V)	Frequency (Hz)	Current (A)	Power (W)	Remarks
Model GTM9200P1323.3 – rated load	90	60	1.95	173	Rated 2.5 A
Model GTM9200P1323.3 – rated load	100	60	1.75	171	Rated 2.5 A
Model GTM9200P1323.3 – rated load	120	60	1.46	171	Rated 2.5 A
Model GTM9200P1323.3 – rated load	132	60	1.32	170	Rated 2.5 A
Model GTM9200P1323.3 – rated load	200	60	1.38	170	Rated 2.5 A
Model GTM9200P1323.3 – rated load	240	60	1.18	167	Rated 2.5 A
Model GTM9200P1323.3 – rated load	264	60	1.09	174	Rated 2.5 A
--	--	--	--	--	--
Model GTM9200P2313.3 – rated load	90	60	3.59	319	Rated 4.0 A
Model GTM9200P2313.3 – rated load	100	60	3.20	318	Rated 4.0 A
Model GTM9200P2313.3 – rated load	120	60	2.65	316	Rated 4.0 A
Model GTM9200P2313.3 – rated load	132	60	2.39	308	Rated 4.0 A
Model GTM9200P2313.3 – rated load	200	60	2.03	302	Rated 4.0 A
Model GTM9200P2313.3 – rated load	240	60	1.76	300	Rated 4.0 A
Model GTM9200P2313.3 – rated load	264	60	1.50	302	Rated 4.0 A
--	--	--	--	--	--
Model GTM9200P20048 – rated load	90	60	2.77	250	Rated 3.2 A
Model GTM9200P20048 – rated load	100	60	2.48	248	Rated 3.2 A
Model GTM9200P20048 – rated load	120	60	2.06	242	Rated 3.2 A
Model GTM9200P20048 – rated load	132	60	1.87	238	Rated 3.2 A
Model GTM9200P20048 – rated load	200	60	1.58	244	Rated 3.2 A
Model GTM9200P20048 – rated load	240	60	1.30	232	Rated 3.2 A
Model GTM9200P20048 – rated load	264	60	1.50	234	Rated 3.2 A

IEC 60601			
Clause	Requirement + Test	Result - Remark	Verdict

--	--	--	--	--	--
Model GTM9200P35048 – rated load	90	60	4.86	435	Rated 5.0 A
Model GTM9200P35048 – rated load	100	60	4.32	430	Rated 5.0 A
Model GTM9200P35048 – rated load	120	60	3.54	418	Rated 5.0 A
Model GTM9200P35048 – rated load	132	60	3.21	416	Rated 5.0 A
Model GTM9200P35048 – rated load	200	60	2.09	414	Rated 5.0 A
Model GTM9200P35048 – rated load	240	60	1.75	414	Rated 5.0 A
Model GTM9200P35048 – rated load	264	60	1.59	400	Rated 5.0 A
supplementary information: -					

15b	**TABLE: residual voltage in attachment plug**										Pass
Voltage measured between:	Measurements [V]										Remarks
	1	2	3	4	5	6	7	8	9	10	
supply pins (pin 1 and pin 2)	0	0	0	0	0	0	0	0	0	0	Pass
Pin 1 and earth pin	6	8	0	8	0	6	4	0	6	6	Pass
Pin 2 and earth pin	6	0	4	6	8	0	0	0	6	8	Pass
supplementary information: -											

15c	**TABLE: residual voltage or energy in capacitors**				Pass
Capacitor and its location	Residual voltage (V)	Time after disconnection (s)	Capacitance value (µF)	Residual energy (mJ)	Remarks
Input L-N	0	1.0 s	0.33uF	0	Pass
supplementary information: -					

IEC 60601			
Clause	Requirement + Test	Result - Remark	Verdict

17h1	**TABLE: defibrillation-proof applied parts**				N/A
Test Condition: Fig. 50 or 51	Accessible part of measurement:	Applied part with test voltage	Test voltage polarity	Measured voltage between Y1 and Y2 (mV)	Remarks
supplementary information:					

17h2	**TABLE: defibrillation-proof recovery time**			N/A
Applied part with test voltage	Test voltage polarity	Recovery time from accompanying documents (s)	Measured recovery time (s)	Remarks
supplementary information:				

18	**TABLE: protective earthing**			Pass
Test location	Test current (A)	Measured voltage (V)	Resistance (ohms)	Remarks
Grounding Stud	40	0.952	0.0238	The resistance did not exceed 0.1 ohm.
supplementary information: Test conducted for 120 seconds.				

IEC 60601			
Clause	Requirement + Test	Result - Remark	Verdict

19	**TABLE: leakage current**				Pass
Type of leakage current and test condition (including single faults)	Supply voltage (V)	Supply frequency (Hz)	Measured max. value (µA)	Remarks	
ER - Model GTM9200P2313.3 - Normal Condition - Normal Polarity	264 Vac	60 Hz	29 / 27	Pass	
ER - Model GTM9200P2313.3 - Normal Condition - Reverse Polarity	264 Vac	60 Hz	30 / 26	Pass	
ER - Model GTM9200P2313.3 - Single Fault Condition – Normal Polarity - Neutral Conductor Open	264 Vac	60 Hz	220 / 152	Pass	
ER - Model GTM9200P2313.3 - Single Fault Condition - Reverse Polarity - Neutral Conductor Open	264 Vac	60 Hz	220 / 149	Pass	
ER - Model GTM9200P35048 - Normal Condition - Normal Polarity	264 Vac	60 Hz	28 / 27	Pass	
ER - Model GTM9200P35048 - Normal Condition - Reverse Polarity	264 Vac	60 Hz	30 / 25	Pass	
ER - Model GTM9200P35048 - Single Fault Condition - Normal Polarity - Neutral Conductor Open	264 Vac	60 Hz	213 / 165	Pass	
ER - Model GTM9200P35048 - Single Fault Condition - Reverse Polarity - Neutral Conductor Open	264 Vac	60 Hz	213 / 165	Pass	
supplementary information: Measured max. value (µA) Before Humidity / Measured max. value (µA) After Humidity					
ER - Earth leakage current EN - Enclosure leakage current P - Patient leakage current PM - Patient leakage current with mains on the applied parts PA - Patient auxiliary current Fig. 15 - refers to Fig. 15 in IEC601-1 MD - Measuring device		A - After humidity conditioning B - Before humidity conditioning 1 - Switch closed or set to normal polarity 0 - Switch open or set to reversed polarity NC - Normal condition SFC - Single fault condition			

IEC 60601			
Clause	Requirement + Test	Result - Remark	Verdict

20	**TABLE: dielectric strength**				Pass
Insulation under test (area from insulation diagram)	Insulation type: (OP-operational / BI-basic / SI-supplementary / DI-double / RI-reinforced)	Reference voltage (V)	Test voltage (V)	Remarks	
B	BI	240 Vac	2121 Vdc	Pass	
C	RI	240 Vac	5656 Vdc	Pass	
supplementary information: Models GTM9200P1323.3, GTM9200P2313.3, GTM9200P20048, GTM9200P35012, GTM9200P35048 were subjected to the above tests.					

21	**TABLE: mechanical strength**		N/A
Part under test	Test (impact, drop, force, handle, rough handling, mobile)	Remarks	
supplementary information:			

24	**TABLE: - stability**		N/A
Part under test	Test condition	Remarks	
supplementary information:			

29	**TABLE: X - radiation**			N/A
Part under test	Test condition	Measured radiation (mR)	Remarks	
supplementary information:				

IEC 60601			
Clause	Requirement + Test	Result - Remark	Verdict

42	**TABLE: normal temperature**	Pass
Supply voltage: 264Vac, 60Hz Ambient temperature: See below	Test Condition: Rated Load	

Measuring location	Measured temperature (°C)	Remarks
Model GTM9200P2313.3	-	-
Ambient	25.1	Pass
Connector 1 (back)	26.0	Pass
F1 (top of casing)	26.3	Pass
L3 Winding	28.3	Pass
L4 Winding	27.6	Pass
L5 Winding	26.7	Pass
L6 Winding	33.4	Pass
BD1 Casing	42.7	Pass
Q1 Casing	43.1	Pass
D3 Casing	43.6	Pass
Q2 Casing	43.9	Pass
T1 Winding	55.4	Pass
T1 Core	51.6	Pass
PCB between C8 and R46-R49	41.0	Pass
L100 Winding	41.6	Pass
D105 Casing	59.2	Pass
Q100 Casing	45.4	Pass
U204 Casing	29.9	Pass
CX2	25.6	Pass
Model GTM9200P20012	-	-
Ambient	23.3	Pass
Connector 1 (back)	31.4	Pass
F1 (top of casing)	32.5	Pass
L3 Winding	34.9	Pass
L4 Winding	39.1	Pass
L5 Winding	37.2	Pass
L6 Winding	53.8	Pass
BD1 Casing	49.3	Pass
Q1 Casing	52.3	Pass
D3 Casing	49.9	Pass
Q2 Casing	57.2	Pass
T1 Winding	60.2	Pass
T1 Core	62.2	Pass
PCB between C8 and R46-R49	54.5	Pass
L100 Winding	51.7	Pass
D105 Casing	52.7	Pass
Q100 Casing	51.3	Pass
U204 Casing	55.7	Pass
Model GTM9200P20048	-	-

IEC 60601			
Clause	Requirement + Test	Result - Remark	Verdict

Ambient	22.8	Pass
Connector 1 (back)	36.2	Pass
F1 (top of casing)	34.8	Pass
L3 Winding	39.4	Pass
L4 Winding	44.7	Pass
L5 Winding	40.8	Pass
L6 Winding	57.4	Pass
BD1 Casing	57.1	Pass
Q1 Casing	57.3	Pass
D3 Casing	57.2	Pass
Q2 Casing	84.9	Pass
T1 Winding	74.4	Pass
T1 Core	73.6	Pass
PCB between C8 and R46-R49	66.1	Pass
L100 Winding	58.4	Pass
D105 Casing	59.2	Pass
Q100 Casing	58.6	Pass
U204 Casing	67.4	Pass
CX2	57.4	Pass
Model GTM9200P35012	-	-
Ambient	23.4	Pass
Connector 1 (back)	24.8	Pass
F1 (top of casing)	23.8	Pass
L3 Winding	28.7	Pass
L4 Winding	26.6	Pass
L5 Winding	25.9	Pass
L6 Winding	28.8	Pass
BD1 Casing	39.9	Pass
Q1 Casing	40.4	Pass
D3 Casing	39.2	Pass
Q2 Casing	43.7	Pass
T1 Winding	41.3	Pass
T1 Core	44.7	Pass
PCB between C8 and R46-R49	40.9	Pass
L100 Winding	31.7	Pass
D105 Casing	38.2	Pass
Q100 Casing	43.6	Pass
U204 Casing	30.9	Pass
Model GTM9200P35048	-	-
Ambient	22.6	Pass
Connector 1 (back)	24.2	Pass
F1 (top of casing)	24.1	Pass
L3 Winding	27.4	Pass
L4 Winding	26.2	Pass
L5 Winding	26.1	Pass
L6 Winding	28.2	Pass
BD1 Casing	38.4	Pass

IEC 60601			
Clause	Requirement + Test	Result - Remark	Verdict

Q1 Casing	38.0	Pass
D3 Casing	36.1	Pass
Q2 Casing	50.3	Pass
T1 Winding	46.4	Pass
T1 Core	42.7	Pass
PCB between C8 and R46-R49	35.0	Pass
L100 Winding	29.1	Pass
D105 Casing	33.7	Pass
Q100 Casing	39.0	Pass
U204 Casing	27.2	Pass
Model GTM9200P35048	-	Impairment of Cooling Tests – Disconnect the Fan Motor Rated Load: Output: 48Vdc, 7.29A
Supply Voltage / Frequency: 90 Vac, 60 Hz	-	-
Ambient Temperature	23.1	-
L3 Winding	116.6	Pass - Impairment of Cooling Tests
L4 Winding	106.9	Pass - Impairment of Cooling Tests
L5 Winding	127.1	Pass - Impairment of Cooling Tests
L6 Winding	141.2	Pass - Impairment of Cooling Tests
BD1 Casing	120.9	Pass - Impairment of Cooling Tests
Q1 Casing	139.1	Pass - Impairment of Cooling Tests
D3 Casing	118.6	Pass - Impairment of Cooling Tests
Q2 Casing	118.7	Pass - Impairment of Cooling Tests
T1 Winding	131.4	Pass - Impairment of Cooling Tests
T1 Core	117.9	Pass - Impairment of Cooling Tests
PCB between C8 and R46-R49	118.3	Pass - Impairment of Cooling Tests
D105 Casing	87.8	Pass - Impairment of Cooling Tests
Q100 Casing	92.2	Pass - Impairment of Cooling Tests
Model GTM9200P35048	-	Impairment of Cooling Tests – Disconnect the Fan Motor Rated Load: Output: 48Vdc, 7.29A
Supply Voltage / Frequency: 264 Vac, 60 Hz	-	-
Ambient Temperature	22.7	-

IEC 60601			
Clause	Requirement + Test	Result - Remark	Verdict

L3 Winding	50.8	Pass - Impairment of Cooling Tests
L4 Winding	55.1	Pass - Impairment of Cooling Tests
L5 Winding	50.6	Pass - Impairment of Cooling Tests
L6 Winding	76.3	Pass - Impairment of Cooling Tests
BD1 Casing	71.2	Pass - Impairment of Cooling Tests
Q1 Casing	74.5	Pass - Impairment of Cooling Tests
D3 Casing	76.1	Pass - Impairment of Cooling Tests
Q2 Casing	95.3	Pass - Impairment of Cooling Tests
T1 Winding	106.4	Pass - Impairment of Cooling Tests
T1 Core	101.1	Pass - Impairment of Cooling Tests
PCB between C8 and R46-R49	85.2	Pass - Impairment of Cooling Tests
D105 Casing	69.6	Pass - Impairment of Cooling Tests
Q100 Casing	70.4	Pass - Impairment of Cooling Tests
COR - indicates measurements taken using change-of-resistance method		
supplementary information: Temperature Limits for Impairment of cooling tests: 1. Temp Limit for "Operational Insulation" on inductors without a UL R/C Insulation System, with only coil/core, and thermocouple right on the coil, is allowed up to the rating of the lowest material in inductor = (1.7 x 130) -17.5 = 203.5 deg C. 2. Temp Limit for Transformers - Reinforced Insulation with UL R/C Class B Insulation Sys. = (1.7 x (130-10)) -17.5 = 186.5.		

44	**TABLE: overflow, spillage, leakage, humidity, ingress of liquids, cleaning, sterilization, desinfection**	N/A

Test type and condition	Part under test	Remarks
supplementary information:		

IEC 60601			
Clause	Requirement + Test	Result - Remark	Verdict

45	**TABLE: hydrostatic pressure and pressure-relief device cycling test**			N/A
Test type and condition		Part under test	Test pressure	Remarks
supplementary information:				

IEC 60601			
Clause	Requirement + Test	Result - Remark	Verdict

52	**TABLE: abnormal operation**	Pass
Test type, condition and clause reference	Observed results	Remarks
DB1 Short, Input 264Vac, clause 52.5.9	F1, F2 opens; Test time 1 second; No breakdown	Model GTM9200P1323.3
Q1 Short, Input 264Vac, clause 52.5.9	F2 opens; Test time 1 second; No breakdown	Model GTM9200P1323.3
Q100 Short, Input 264Vac, clause 52.5.9	Unit operates normally; Test time 1 hour, No breakdown	Model GTM9200P1323.3
D105 Short, Input 264Vac, clause 52.5.9	Unit operates normally; Test time 1 hour, No breakdown	Model GTM9200P1323.3
DB1 Short, Input 264Vac, clause 52.5.9	F1 opens; Test time 1 second; No breakdown	Model GTM9200P20048
Q1 Short, Input 264Vac, clause 52.5.9	F2 opens; Test time 1 second; No breakdown	Model GTM9200P20048
Q100 Short, Input 264Vac, clause 52.5.9	Unit operates normally; Test time 1 hour, No breakdown	Model GTM9200P20048
DB1 Short, Input 264Vac, clause 52.5.9	F1, F2 open; Test time 1 second; No breakdown	Model GTM9200P35048
Q1 Short, Input 264Vac, clause 52.5.9	F1 open; Test time 1 second; No breakdown	Model GTM9200P35048
Q100 Short, Input 264Vac, clause 52.5.9	Operates normally, Test time 1 hour, No breakdown	Model GTM9200P35048
U204 Short, Input 264Vac, clause 52.5.9	Foldsback; Test time 1 second; No breakdown	Model GTM9200P35048
D105 Short, Input 264Vac, clause 52.5.9	Operates normally, Test time 1 hour, No breakdown	Model GTM9200P35048
U204, Short A to C, Input 264Vac, clause 52.5.9	Folds Back, Test time 1 hour, No breakdown	Model GTM9200P2313.3
D105, Short 1 to 2, Input 264Vac, clause 52.5.9	Operates normally, Test time 1 hour, No breakdown	Model GTM9200P2313.3
Disconnect the Fan – Loaded at Rated Output 48Vdc, 7.29A - Supply Voltage / Frequency: 90 Vac, 60 Hz - clause 55.2.5	Sample operates normally, no noticeable hazard.	Model GTM9200P35048 - See Normal Temperature Test page for additional results - Pass
Disconnect the Fan -Loaded at Rated Output 48Vdc, 7.29A - Supply Voltage / Frequency: 264Vac, 60 Hz - clause 55.2.5	Sample operates normally, no noticeable hazard.	Model GTM9200P35048 - See Normal Temperature Test page for additional results - Pass
supplementary information: -		

IEC 60601			
Clause	Requirement + Test	Result - Remark	Verdict

56.1	**TABLE: list of critical components**				Pass
object/part No.	manufacturer/ trademark	type/model	technical data	standard	mark(s) of conformity[1])
Printed Wiring Board	various	various	Min V-0, FR4 material, rated 130°C min.	UL 796C	UL R/C, -
Input Connector for -S and -HOXXX versions.	Joint Tech Electronic Industrial Co Ltd.	A3960WV-5P	250V, 5A, 3.96mm, Second and fourth pins removed, rated min V-2.	UL 1977 IEC 60947	UL R/C, TUV, CSA
Alternate Input Connector for -S and -HOXXX versions.	Various	Various	250V min, 5A min, 3.96mm, Second and fourth pins removed, rated min V-2.	UL 1977 IEC 60947	UL R/C, TUV CSA
Input Connector for -HIXXX and -HIOXXX versions	Joint Tech Electronic Industrial Co Ltd.	A3960H-5P	250V, 5A, 3.96mm, Second and fourth pins removed, rated min V-2.	UL 1977 IEC 60947	UL R/C, TUV CSA
Alternate Input Connector for -HIXXX and -HIOXXX versions	Various	Various	250V, 5A, 3.96mm, Second and fourth pins removed, rated min V-2.	UL 1977 IEC 60947	UL R/C, CSA TUV
Appliance Inlet for -R and -HORXXX versions	Inalways	0707-1	250V, 10A	UL 498 IEC 60320-1, IEC 60320-2-2	UL, TUV, CSA SEMKO NEMKO DEMKO FIMKO
Alternate Appliance Inlet for -R and -HORXXX versions	Rich Bay Co Ltd	R-30190 (B11)	250V, 10A, rated V-0.	UL 498 IEC 60320-1, IEC 60320-2-2	UL, VDE
Alternate Appliance Inlet for -R and -HORXXX versions	SUPERCOM WIRE & CABLE CO LTD	SC-9-3P	250V, 10A, rated V-0.	UL 498 IEC 60320-1, IEC 60320-2-2	UL R/C, CSA VDE SEMKO NEMKO DEMKO KEMA FI, SEV, OVE, NBN, IMQ

IEC 60601			
Clause	Requirement + Test	Result - Remark	Verdict

56.1	**TABLE: list of critical components**					Pass
object/part No.	manufacturer/ trademark	type/model	technical data	standard	mark(s) of conformity[1])	
Output Connector for -HIXXX, HOXXX and HIOXXX versions	Joint Tech Electronic Industrial Co Ltd.	C4255HF-2X8P	250V, 7A, 16 circuits 4.20mm, rated min V-2.	UL 1977 IEC 60947	UL R/C, TUV CSA	
Alternate Output Connector for -HIXXX, -HOXXX and -HIOXXX versions	Various	Various	Min 250V, min 7A, 16 circuits 4.20mm, rated min V-2.	UL 1977 IEC 60947	UL R/C, TUV CSA	
Fuse (F1, F2)	Wickmann	372/TR5 Series	For 132W units: 250V, 3.2 A, time lag; For 200W & 185W units: 250V, 4A time lag; For 231W units: 250V, 5A, time lag For 350W & 280W units: 250V, 6.3A, time lag.	UL 198G IEC 60127	UL R/C, VDE SEMKO METI CCC	
Alternate Fuse (F1, F2)	Littelfuse	372/TR5 Series	For 132W units: 250V, 3.15 A, time lag; For 200W & 185W units: 250V, 4A time lag; For 231W units: 250V, 5A, time lag For 350W & 280W units: 250V, 6.3A, time lag. This fuse	UL 198G IEC 60127	UL R/C, VDE SEMKO METI CCC PSE-JET K-Mark	

IEC 60601			
Clause	Requirement + Test	Result - Remark	Verdict

56.1	**TABLE: list of critical components**				Pass
object/part No.	manufacturer/ trademark	type/model	technical data	standard	mark(s) of conformity[1])
			has been deemed acceptable as an alternate based upon its I-t curve found in Enclosure 7		
Alternate Fuse (F1, F2)	Bel	MRT Series	For 132W units: 250V, 3.15 A, time lag; For 200W & 185W units: 250V, 4A time lag; For 231W units: 250V, 5A, time lag For 350W & 280W units: 250V, 6.3A, time lag. This fuse has been deemed acceptable as an alternate based upon its I-t curve found in Enclosure 7	UL 198G IEC 60127	UL R/C, VDE SEMKO CSA PSE CCC
Alternate Fuse (F1, F2)	Conquer	MET Series	For 132W units: 250V, 3.2 A, time lag; For 200W & 185W units: 250V, 4A time lag; For 231W units: 250V, 5A, time lag For 350W &	UL 198G IEC 60127	UL R/C, VDE SEMKO CSA MITI CCC

IEC 60601			
Clause	Requirement + Test	Result - Remark	Verdict

56.1	**TABLE: list of critical components**				Pass
object/part No.	manufacturer/ trademark	type/model	technical data	standard	mark(s) of conformity[1])
			280W units: 250V, 6.3A, time lag This fuse has been deemed acceptable as an alternate based upon its I-t curve found in Enclosure 7		
Alternate Fuse (F1, F2)	Walter	2000 Series	For 132W units: 250V, 3.2 A, time lag; For 200W & 185W units: 250V, 4A time lag This fuse has been deemed acceptable as an alternate based upon its I-t curve found in Enclosure 7	UL 198G IEC 60127	UL R/C, VDE SEMKO PSE CCC
Alternate MOV (VDR1)	Thinking Electronics	TVR07471	300Vac	UL 1449 IEC 61643	UL R/C, CSA VDE No. 40021243 CQC
Alternate MOV (VDR1)	Littelfuse	V07E300	300Vac	UL 1449 IEC 61643	UL R/C, CSA VDE No. 116895
Alternate MOV (VDR1)	Panasonic	ERZV-07D471	300Vac	UL 1449 IEC 61643	UL R/C, CSA VDE No. 40018677
Alternate MOV (VDR1)	JOYIN	7N471K (65PU5)	300Vac	UL 1449 IEC 61643	UL R/C, CSA VDE No. 005937
Line to Line Capacitor (CX1)	Cheng Tung	CTX	300V min, 0.33uF maximum, Class X1	UL 1283 IEC 60384-14	UL R/C, VDE No. 40026382
Line to Line Capacitor (CX1)	Xiamen Wanming UTX	HQX	250V min, 0.33uF maximum, Class	UL 1283 IEC 60384-14	UL R/C, VDE No. 40023119, FIMKO

IEC 60601			
Clause	Requirement + Test	Result - Remark	Verdict

56.1	**TABLE: list of critical components**				Pass
object/part No.	manufacturer/ trademark	type/model	technical data	standard	mark(s) of conformity[1])
Alternate			X2		
Line to Line Capacitor (CX1) Alternate	Pilkor	PCX2 Series	250V min, 0.33uF maximum, Class X2	UL 1283 IEC 60384-14	UL R/C, CSA FIMKO SEMKO ENEC No. 614465
Line to Line Capacitor (CX1) Alternate	Panasonic	ECQUL	250V min, 0.33uF maximum, Class X2	UL 1283 IEC 60384-14	UL R/C, CSA VDE No. 121548
Line to Line Capacitor (CX1) Alternate	EVOX Rifa	PHE	275V, 0.33uF maximum, Class X2	UL 1283 IEC 60384-14	UL R/C, CSA ENEC VDE No. 101316
Line to Line Capacitor (CX1) Alternate	Okaya	LE	250V min, 0.33uF maximum, Class X2	UL 1283 IEC 60384-14	UL R/C, CSA SEMKO/ ENEC No. 815940
Line to Line Capacitor (CX1) Alternate	Dain	MPX	250V min, 0.33uF maximum, Class X2	UL 1283 IEC 60384-14	UL R/C, CSA, VDE No. 40018798
Line to Line Capacitor (CX2,CX3)	Cheng Tung	CTX	300V, 0.47uF maximum, Class X1	UL 1283 IEC 60384-14	UL R/C, CSA, VDE No. 40026382
Line to Line Capacitor (CX2, CX3) Alternate	Xiamen Wanming UTX	HQX	250V min, 0.47uF maximum, Class X2	UL 1283 IEC 60384-14	UL R/C, VDE No. 40023119, FIMKO
Line to Line Capacitor (CX2, CX3) Alternate	Pilkor	PCX Series	250V min, 0.47uF maximum, Class X2	UL 1283 IEC 60384-14	UL R/C, CSA SEMKO ENEC No. 614465
Line to Line Capacitor (CX2, CX3) Alternate	Panasonic	ECQUL	250V min, 0.47uF maximum, Class X2	UL 1283 IEC 60384-14	UL R/C, CSA VDE No. 121548
Line to Line Capacitor (CX2, CX3) Alternate	Evox Rifa	PHE	250V min, 0.47uF maximum, Class X2	UL 1283 IEC 60384-14	UL R/C, ENEC VDE No. 101316
Line to Line Capacitor (CX2, CX3) Alternate	Okaya	RE	250V min, 0.47uF maximum, Class X2	UL 1283 IEC 60384-14	UL R/C, SEMKO/ ENEC No. 803126

IEC 60601			
Clause	Requirement + Test	Result - Remark	Verdict

56.1	**TABLE: list of critical components**				Pass
object/part No.	manufacturer/ trademark	type/model	technical data	standard	mark(s) of conformity[1])
Line to Line Capacitor (CX2, CX3) Alternate	Dain	MPX	250V min, 0.47uF maximum, Class X2	UL 1283 IEC 60384-14	UL R/C, VDE No. 40018798
Line to Line Capacitor (CX2,CX3) Alternate	Carli Electronics Co Ltd	MPX	250V min, 0.47uF maximum, Class X2	UL 1283 IEC 60384-14	UL R/C, VDE No. 40008520
Line to Earth Capacitor (CY1, CY2)	Walsin / Pan Overseas	AC#	250V min, 1n5 maximum, min Class Y2	UL 1283 IEC 60384-14	UL R/C, VDE no. 40001829 SEMKO
Line to Earth Capacitor (CY1, CY2) Alternate	Murata	KH#	250V min, 1n 5 maximum, min Class Y2	UL 1283 IEC 60384-14	UL R/C, VDE no. 40002796
Line to Earth Capacitor (CY1, CY2) Alternate	TDK	CD	250V min, 1n maximum, min Class Y2	UL 1283 IEC 60384-14	UL R/C, VDE No. 40017931
Line to Earth Capacitor (CY1, CY2) Alternate	Success	SF	250V min, 1n5 maximum, min Class Y2	UL 1283 IEC 60384-14	UL R/C, VDE No. 40016665
Line to Earth Capacitor (CY1, CY2) Alternate	Welson	KL	250V min, 1n5 maximum, min Class Y2	UL 1283 IEC 60384-14	UL R/C, VDE No. 40016156
Line to Earth Capacitor (CY1, CY2) Alternate	JYA-NAY CO. LTD	JY	250V min, 1n5 maximum, min Class Y2	UL 1283 IEC 60384-14	UL R/C, VDE No. 40001827, CSA
Capacitor, bridging (CY6)	Walsin / Pan Overseas	AH	250V min, 1n maximum, Class Y1	UL 1283 IEC 60384-14	UL R/C, VDE No. 40001804
Capacitor, bridging (CY6) Alternate	Murata	KX	250V min, 1n maximum, Class Y1	UL 1283 IEC 60384-14	UL R/C, VDE No. 40002831
Capacitor, bridging (CY6) Alternate	TDK	CD	250V min, 1n maximum, Class Y1	UL 1283 IEC 60384-14	UL R/C, CSA VDE No. 40017931
Capacitor, bridging (CY6) Alternate	Welson	WD	250V min, 1n maximum, Class Y1	UL 1283 IEC 60384-14	UL R/C, VDE No. 40016157
Alternate Capacitor	JYA-NAY CO. LTD	JN	250V min, 1n maximum, Class	UL 1283 IEC 60384-14	UL R/C, VDE No. 40001831

IEC 60601			
Clause	Requirement + Test	Result - Remark	Verdict

56.1	**TABLE: list of critical components**				Pass
object/part No.	manufacturer/ trademark	type/model	technical data	standard	mark(s) of conformity[1])
bridging (CY6)			Y1		
NTC Thermistor (THR1)	Thinking Electronics or equivalent	SCK	16 Ohm, 4A	UL 1434 IEC 60730	UL R/C, CSA
Diode Bridge (BD1)	ST or equivalent	600 V Type	600V 10A minimum	Tested in the power supply.	-, -
Capacitor (C8)	Rubycon or equivalent	MXG Series	450V, 220uF to 390uF.	Tested in the power supply.	-, -
MOSFET (Q1)	ST or equivalent	STW45NM50	500V, 40A minimum	Tested in the power supply.	-, -
MOSFET (Q2, Q3)	ST or equivalent	STP20NM50	500V, 15A minimum	Tested in the power supply.	-, -
DIODE (D3)	CREE or equivalent	CDS06060A or equivalent	600V, 6A minimum	Tested in the power supply.	-, -
Transformer (T1)	WUXI ZHONGTONG ELECTRONICS CO. LTD	p/n 400-0093. See Diagrams Enclosure for details of construction	Provides reinforced/double insulation. Provided w/ R/C Class B (130°C) insulation system. See Diagrams Enclosure 4-01 for details.	Tested in the power supply.	-, -
Insulation System (employed in T1 and L6)	WU JIANG TAIHU INSULATING MATERIAL	TaiHu 130-TM table II, 130 (B) Insulation System	Class B (130°C)	UL 1446	UL R/C, -
PFC Choke (L6) – Reinforced Insulation	WUXI ZHONGTONG ELECTRONICS CO. LTD	405-0004	Class B, Reinforced Insulation provided by triple insulated wire winding (Cosmolink, TIW-M) on secondary winding. See Enclosure Diagrams 4-02 and Insulation System above	UL1446	UL R/C , -
Differential Choke L3	Globtek	403-0040	130 deg. C min. wire on a core, 337uH	Tested in the power supply.	-, -

IEC 60601			
Clause	Requirement + Test	Result - Remark	Verdict

56.1	**TABLE: list of critical components**				Pass
object/part No.	manufacturer/ trademark	type/model	technical data	standard	mark(s) of conformity[1])
Common Mode Choke L5	Globtek	404-0011	130 deg. C min. wire on a core, 21mH	Tested in the power supply.	-, -
Common Mode Choke L4	Globtek	404-0013	130 deg. C min. wire on a core, 4.3uH	Tested in the power supply.	-, -
Optical Isolator (U203, U204)	Lite-on	LTV817C	Minimum 5000 Vac isolation	UL 1577 IEC 60947-5	UL R/C, VDE No. 40015248
Alternate Optical Isolator (U203, U204)	Sharp	PC817C	Minimum 5000 Vac isolation	UL 1577 IEC 60747-5	UL R/C, VDE No. 40008087
Alternate Optical Isolator (U203, U204)	Fairchild	FOD817C	Minimum 5000 Vac isolation	UL 1577 IEC 60747-5	UL R/C, VDE No. 40026857
Alternate Optical Isolator (U203, U204)	VISHAY / Infineon	SFH615ABM	Minimum 5000 Vac isolation	UL 1577 IEC 60747-5	UL R/C, VDE No. 091888
Alternate Optical Isolator (U203, U204)	Cosmo Electronics Co.	KP1010C	Minimum 5000 Vac isolation	UL 1577 IEC 60747-5	UL R/C, VDE No. 101347
Alternate Optical Isolator (U203, U2044)	Everlight	EL817C	Minimum 5000 Vac isolation	UL 1577 IEC 60747-5	UL R/C, VDE No. 132249
Light Emitting Diode (LED1)	LITEON Or equivalent	LTL-16KGE	575 nm wavelength Green visible light range only	Tested in the power supply.	-, -
Alternate Light Emitting Diode (LED1)	Cosmo Electronics Co.	KLR03CGX	525 nm wavelength Green visible light range only.	Tested in the power supply.	-, -
Alternate Light Emitting Diode (LED1)	Bright Led Electronics Corp	BL-B2141-AT LED Ø3	Gallium Phosphide green diffused.	Tested in the power supply.	-, -
Alternate Light Emitting Diode (LED1)	Brightek Optoelectronics Co., Ltd.	LA304G1DA-1A/01 Ø3	Gallium Phosphide green diffused.	Tested in the power supply.	-, -
Insulator between PCB and Chassis	Sun-Yo Industrial Co	HX-3F1301-001	Formex GK-18 Rated min V-0, min thickness of 0.43mm	UL 94	UL R/C, -
Alternate Insulator between PCB	DMC	HX-3F1301-001	Formex GK-18 Rated min V-0, min thickness of	UL 94	UL R/C, -

IEC 60601			
Clause	Requirement + Test	Result - Remark	Verdict

56.1	**TABLE: list of critical components**				Pass
object/part No.	manufacturer/ trademark	type/model	technical data	standard	mark(s) of conformity[1])
and Chassis			0.43mm		
Insulator between PCB and Chassis	FU YI	HX-3F1301-001	Formex GK-18 Rated min V-0, min thickness of 0.43mm	UL 94	UL R/C, -
Insulator between Metal Cover and PCB for 350W Version	Sun-Yo Industrial Co	HX-3F1301-005	GE FR700 Rated min 94V-0, min thickness of 0.25mm	UL 94	UL R/C, -
Alternate Insulator between Metal Cover and PCB for 350W Version	DMC	HX-3F1301-005	GE FR700 Rated min 94V-0, min thickness of 0.25mm	UL 94	UL R/C, -
Insulator between Metal Cover and PCB for 350W Version (Alternate)	FU YI	HX-3F1301-005	GE FR700 Rated min 94V-0, min thickness of 0.25mm	UL 94	UL R/C, -
Insulator on metal top of C8 for 350W Version	Sun-Yo Industrial Co	HX-3F1301-003	GE FR700 Rated min 94V-0, min thickness of 0.25mm	UL 94	UL R/C, -
Alternate Insulator on metal top of C8 for 350W Version	DMC	HX-3F1301-003	GE FR700 Rated min 94V-0, min thickness of 0.25mm	UL 94	UL R/C, -
Alternate Insulator on metal top of C8 for 350W Version	FU YI	HX-3F1301-003	GE FR700 Rated min 94V-0, min thickness of 0.25mm	UL 94	UL R/C, -
U-Channel Chassis	GlobTek, ENG or equivalent	3F0111-00	Aluminum or Steel, Dimensions: minimum 107.2mm by 198.4mm by 45.6mm ; max 3mm thick.	Tested in the power supply.	-, -
Metal Cover for	GlobTek, ENG or	3F0111-00	Aluminum or	Tested in the	-, -

IEC 60601			
Clause	Requirement + Test	Result - Remark	Verdict

56.1	**TABLE: list of critical components**				Pass
object/part No.	manufacturer/ trademark	type/model	technical data	standard	mark(s) of conformity[1])
350W version	equivalent		Steel, Dimensions: minimum 107.2mm by 198.4mm; max 1.5mm thick. Provided with holes for FAN	power supply.	
Nylon Bushing for secondary side heat sinks	Pingood or equivalent	812D	Nylon 66 Rated min 94V-2	UL 94	UL R/C, -
Fan for 231W and 350W version	ADDA	AD0812MB-A70GL	Brushless 12VDC 80x80X25mm, 34.4 CFM	UL 507 IEC 60950	UL R/C, TUV CSA CE
Alternate Fan for 231W and 350W version	SUNON	KD1208PTB3 KD1208PT	Brushless 12VDC 80x80x25mm, 33.1 CFM	UL 507 IEC 60950	UL R/C, TUV CE
Alternate Fan for 231W and 350W version	NMB	3110KL-04W-B30-P00	Brushless 12VDC 80x80x25mm, 31.8 CFM	UL 507 IEC 60950	UL R/C, CSA VDE CE
Alternate Fan for 231W and 350W version	EBM Papst	8412NME	Brushless 12VDC 80x80x25mm, 34.1 CFM	UL 507 IEC 60950	UL R/C, CSA VDE
Marking Label	AVERY (CHINA) CO LTD	2M WH PET TC3/S333	150 deg C on Aluminum or steel. To be used with only the following ink(s): Ricoh "B110CR", or "B110C"; Armor "2230-600-105"; General "SD502", or "B325"; Zebra "5095"; Sony "TR4065";	UL969	UL R/C, -
[1]) an asterisk indicates a mark which assures the agreed level of surveillance					

IEC 60601			
Clause	Requirement + Test	Result - Remark	Verdict

56.10	**TABLE: actuating parts and controls**	N/A
Part under test	Torque applied	Remarks
supplementary information:		

56.11b	**TABLE: foot operated control devices-loading**	N/A
Part under test	Observed results	Remarks
supplementary information:		

57.4	**TABLE: cord anchorages**			N/A
Cord under test	Mass of equipment	Pull	Torque	Remarks
supplementary information:				

57.4b	**TABLE: cord bending**		N/A
Cord under test	Test mass	Measured curvature	Remarks
supplementary information:			

IEC 60601			
Clause	Requirement + Test	Result - Remark	Verdict

57.9.1a	**TABLE: transformer short circuit**						Pass
Winding under test	Protection	Measured temperatures (°C)			Test duration	Remarks	
		Primary	Secondary	Ambient			
Model GTM9200 P2313.3 - T1 -Output Overload	Inherent	-	-	22.3 °C	1 second	Output folds back folds back after 1 second.	
Model GTM9200 P35048 - T1 -Output Overload	Inherent	-	-	22.4 °C	1 second	Output folds back folds back after 1 second.	
supplementary information: Output folds back, fan continues to operate.							

57.9.1b	**TABLE: overload**							Pass
Winding under test	Protection	Measured temperatures (°C)			Test duration	Test current or thermal cutout temp.	Remarks	
		Primary	Secondary	Ambient				
Model GTM9200 P2313.3 - T1 -Output Overload	Inherent	55.2 °C	55.2 °C	22.3 °C	1.5 hrs.	74.12 A	Input Voltage, 264 Vdc; Final Output Voltage 2.91 Vdc	
Model GTM9200 P35048 - T1 -Output Overload	Inherent	61.1 °C	61.1 °C	22.4 °C	1 hr.	8.72 A	Input Voltage, 264 Vdc; Final Output Voltage 47.60 Vdc	
supplementary information: -								

IEC 60601			
Clause	Requirement + Test	Result - Remark	Verdict

57.9.2	**TABLE: transformer dielectric strength**				N/A
Transformer under test	Test voltage applied to	Test voltage	Test frequency	Remarks	
supplementary information:					

IEC 60601			
Clause	Requirement + Test	Result - Remark	Verdict

	TABLE: additional tests		Pass
Clause	Test type and condition	Remarks and observed results	Verdict
Measurement of Reference Voltages – 20.3	Model GTM9200P35012 – Input 240 Vac, 60Hz, Rated Output: T1-3, 4 to T1-7, 8 (FL1)	Measured peak-to-peak voltage =400v; Measured peak-to-peak voltage divided by 2 * square root of 2 = 141V; Measured Vrms =175v; Measured Vpk =180v;	Pass
Measurement of Reference Voltages – 20.3	Model GTM9200P35012 – Input 240 Vac, 60Hz, Rated Output: T1-3, 4 to T1-11, 12 (FL2)	Measured peak-to-peak voltage =350v; Measured peak-to-peak voltage divided by 2 * square root of 2 =124V; Measured Vrms =134v; Measured Vpk =180v;	Pass
Measurement of Reference Voltages – 20.3	Model GTM9200P35012– Input 240 Vac, 60Hz, Rated Output: T1-5, 6 to T1-7, 8 (FL1)	Measured peak-to-peak voltage =520v; Measured peak-to-peak voltage divided by 2 * square root of 2 = 184V; Measured Vrms =208v; Measured Vpk =420v;	Pass
Measurement of Reference Voltages – 20.3	Model GTM9200P35012 – Input 240 Vac, 60Hz, Rated Output: T1-5, 6 to T1-11, 12 (FL2)	Measured peak-to-peak voltage =672v; Measured peak-to-peak voltage divided by 2 * square root of 2 = 238V; Measured Vrms =142v; Measured Vpk =424v;	Pass - 238V is the Highest Working / Reference Voltage across the Primary - Secondary insulation.
Measurement of Reference Voltages – 20.3	Model GTM9200P35012 – Input 240 Vac, 60Hz, Rated Output: T1-1 to T1-7, 8 (FL1)	Measured peak-to-peak voltage =220v; Measured peak-to-peak voltage divided by 2 * square root of 2 = 78V; Measured Vrms =51v; Measured Vpk =190v;	Pass
Measurement of Reference Voltages – 20.3	Model GTM9200P35012 – Input 240 Vac, 60Hz, Rated Output: T1-1 to T1-11, 12 (FL2)	Measured peak-to-peak voltage =240v; Measured peak-to-peak voltage divided by 2 * square root of 2 = 85V; Measured Vrms =53v;	Pass

IEC 60601			
Clause	Requirement + Test	Result - Remark	Verdict
		Measured Vpk =130v;	
Measurement of Reference Voltages – 20.3	Model GTM9200P35012 – Input 240 Vac, 60Hz, Rated Output: T1-2 to T1-7, 8 (FL1)	Measured peak-to-peak voltage =190v; Measured peak-to-peak voltage divided by 2 * square root of 2 = 67V; Measured Vrms =26v; Measured Vpk =100v;	Pass
Measurement of Reference Voltages – 20.3	Model GTM9200P35012 – Input 240 Vac, 60Hz, Rated Output: T1-2 to T1-11, 12 (FL2)	Measured peak-to-peak voltage =100v; Measured peak-to-peak voltage divided by 2 * square root of 2 = 35V; Measured Vrms =24v; Measured Vpk =50v;	Pass
=	=	=	=
Measurement of Reference Voltages – 20.3	Model GTM9200P35012 – Input 240 Vac, 60Hz, Rated Output: L6: 1S to 4S	Measured peak-to-peak voltage =225v; Measured peak-to-peak voltage divided by 2 * square root of 2 = 80V; Measured Vrms =50v; Measured Vpk =111v;	Pass
Measurement of Reference Voltages – 20.3	Model GTM9200P35012 – Input 240 Vac, 60Hz, Rated Output: L6: 1F to 4S	Measured peak-to-peak voltage =39 v; Measured peak-to-peak voltage divided by 2 * square root of 2 = 14V; Measured Vrms =7v; Measured Vpk =32v;	Pass
Measurement of Reference Voltages – 20.3	Model GTM9200P35012 – Input 240 Vac, 60Hz, Rated Output: L6: 1S to 4F	Measured peak-to-peak voltage =376v; Measured peak-to-peak voltage divided by 2 * square root of 2 = 133V; Measured Vrms =137v; Measured Vpk =248v;	Pass
Measurement of Reference Voltages – 20.3	Model GTM9200P35012 – Input 240 Vac, 60Hz, Rated Output: L6: 1F to 4F	Measured peak-to-peak voltage =192v; Measured peak-to-peak voltage divided by 2 * square root of 2 = 68V; Measured Vrms =48.3v;	Pass

IEC 60601			
Clause	Requirement + Test	Result - Remark	Verdict
		Measured Vpk =115v;	
Measurement of Reference Voltages – 20.3	Model GTM9200P35012 – Input 240 Vac, 60Hz, Rated Output: L6: 2S to 4S	Measured peak-to-peak voltage =241v; Measured peak-to-peak voltage divided by 2 * square root of 2 = 85V; Measured Vrms =50v; Measured Vpk =240v;	Pass
Measurement of Reference Voltages – 20.3	Model GTM9200P35012 – Input 240 Vac, 60Hz, Rated Output: L6: 2F to 4S	Measured peak-to-peak voltage =197v; Measured peak-to-peak voltage divided by 2 * square root of 2= 70V; Measured Vrms =50v; Measured Vpk =100v;	Pass
Measurement of Reference Voltages – 20.3	Model GTM9200P35012 – Input 240 Vac, 60Hz, Rated Output: L6: 2S to 4F	Measured peak-to-peak voltage =240v; Measured peak-to-peak voltage divided by 2 * square root of 2 = 85V; Measured Vrms =51.2v; Measured Vpk =120v;	Pass
Measurement of Reference Voltages – 20.3	Model GTM9200P35012 – Input 240 Vac, 60Hz, Rated Output: L6: 2F to 4F	Measured peak-to-peak voltage =174v; Measured peak-to-peak voltage divided by 2 * square root of 2 = 62V; Measured Vrms =49.9v; Measured Vpk =91v;	Pass
Measurement of Reference Voltages – 20.3	Model GTM9200P35012 – Input 240 Vac, 60Hz, Rated Output: L6: 3S to 4S	Measured peak-to-peak voltage =400v; Measured peak-to-peak voltage divided by 2 * square root of 2 = 141V; Measured Vrms =120v; Measured Vpk =260v;	Pass
Measurement of Reference Voltages – 20.3	Model GTM9200P35012 – Input 240 Vac, 60Hz, Rated Output: L6: 3F to 4S	Measured peak-to-peak voltage =450v; Measured peak-to-peak voltage divided by 2 * square root of 2 = 160V; Measured Vrms =120v; Measured Vpk =200v;	Pass
Measurem	Model GTM9200P35012 –	Measured peak-to-peak voltage =370v;	Pass

IEC 60601			
Clause	Requirement + Test	Result - Remark	Verdict
ent of Reference Voltages – 20.3	Input 240 Vac, 60Hz, Rated Output: L6: 3S to 4F	Measured peak-to-peak voltage divided by 2 * square root of 2 = 131V; Measured Vrms =120v; Measured Vpk ==186v;	
Measurement of Reference Voltages – 20.3	Model GTM9200P35012 – Input 240 Vac, 60Hz, Rated Output: L6: 3F to 4F	Measured peak-to-peak voltage =420v; Measured peak-to-peak voltage divided by 2 * square root of 2 = 149V; Measured Vrms =120v; Measured Vpk =200v;	Pass
supplementary information: Triple Insulated wire employed in T1, and Secondary of L6. NOTE : Per Note 2 of Table V, " Where the voltage to which the relevant insulation is subjected in NORMAL USE is non-sinusoidal A.C., the value of the test voltage shall be determined from table V using a reference voltage (U) equal to the measured peak-to-peak voltage divided by 2 * square root of 2. Therefore, “Measured peak-to-peak voltage divided by 2 * square root of 2” was used as (U).			

Enclosure

National Differences

Australia
Austria*
Belgium*
Brazil*
Canada
Czech Republic*
Denmark
Finland*
France*
Germany*
Greece*
Hungary*
India*
Ireland*
Israel
Italy*
Kenya*
Korea
Netherlands*
Norway*
Poland*
Portugal*
Russia*
Serbia and Montenegro*
Slovakia*
Slovenia*
Sweden*
Switzerland*
Turkey*
USA
Ukraine*
United Kingdom*

* No National Differences Declared
** Only Group Differences

IEC 60601			
SubClause	Difference + Test	Result - Remark	Verdict

Australia - Differences to IEC 60601-1:1988 + A1:1991 + A2:1995			
6.1g	Insert the following between the first and second dashes: For low voltage equipment rated at 200 V or more, a voltage rating (which may be part of a range) of not less than 230 V. Supply frequency ratings which include 60 Hz must also include 50 Hz.		Pass
6.6	Replace the existing text of Item a) with the following: a) Identification of the content of gas cylinders used in medical practice as part of electrical EQUIPMENT shall be in accordance with AS 1944, (see also sub-clause 56.3a).		N/A
28.2a	Ceiling-supported EQUIPMENT		N/A
28.2a	i. EQUIPMENT fitted with an anticrash device or have suspension cables duplicated and independently anchored.		N/A
28.2a	ii. Motorized drives designed to prevent the driven part from becoming hazardous in the event of a power failure.		N/A
28.2a	iii. Carriages, brakes, and supports designed such that any single failure will not constitute a hazard to the PATIENT.		N/A
28.2a	iv. Effective means incorporated to prevent carriages running off supporting rails.		N/A
28.2a	v. Effective means incorporated to facilitate adequate inspection of cables and anchorages.		N/A
28.2a	vi. Proximity or pressure switches may be used to minimize hazards.		N/A
28.2a	vii. Ceiling-supported EQUIPMENT or parts thereof connected by electrical supply cables provided with stops (e.g. for limitation of rotation or linear movement) to restrict movement in a manner which avoids any undue strain on the wiring termination or damage to the wiring.		N/A
28.2b	Floor and floor-to-ceiling supported (including mobile) EQUIPMENT.		N/A
28.2b	i. Anticrash devices fitted to cable, chains, etc.		N/A
28.2b	ii. Means incorporated to facilitate adequate inspection of cables and anchorages.		N/A
28.2b	iii. Cross-arms or pivots fitted with adequate stops, locknuts, grub screws, or similar devices to prevent supported masses from being dislodged.		N/A

IEC 60601			
SubClause	Difference + Test	Result - Remark	Verdict
42.3	Item 2) Add the following to the first dash: For this clause only, low voltage equipment rated at greater than 200 V is regarded as having a maximum rated voltage of 230 V.		Pass
52.5.8	Table XII: In second row, first dash, after "if impedance protected", add "maximum value".		N/A
56.3a	Replace the text in the third dash by the following: Medical gas connections on EQUIPMENT shall, if operating at positive pressures greater than 50 kPa in NORMAL USE, comply with AS 2472, AS 2473, or AS 2896 as appropriate.		N/A
57.2a	Replace "not used" with: Supply plugs - Provision for inspection Where a supply flexible cord is fitted with a rewirable plug of a type complying with the requirements of AS 3112 for 3 pin plugs, the plug clear-backed to facilitate inspection of the cord colors and the condition of the terminations.		N/A

IEC 60601			
SubClause	Difference + Test	Result - Remark	Verdict

Canada - Differences to IEC 60601-1:1988 + A1:1991 + A2:1995			
6	Canadian difference to this clause no longer applicable		N/A
6.61	Point of connection of gas cylinders:		N/A
6.61	- is gas specific		N/A
6.61	- is non-interchangeable		N/A
6.61	- is identified		N/A
56.3a	Medical gas inlet connectors:		N/A
56.3a	- are gas specific		N/A
56.3a	- are non-interchangeable		N/A
56.3a	- are DISS type complying with CGA V-5		N/A
56.3a	- are configured to permit the supply from assemblies complying with CAN/CSA - Z5359-04 (replaces Z305.2)		N/A
56.6a	Where consequential loss of function caused by operation of a thermal cut-out presents a safety hazard, both visible and audible warnings provided		N/A
57.2g	Mains plug of non-permanent installed equipment:		N/A
57.2g	- if molded on type - hospital grade complying with CSA C22.2, No. 21		N/A
57.2g	- hospital grade disassembly type complying with CSA C22.2, No. 42		N/A
57.2g	- if Class II equipment - polarized hospital grade CSA configuration 1-15P		N/A
57.3b	Detachable power supply cords:		N/A
57.3b	- unlikely to be detached accidentally		N/A
57.3b	- impedance of earth contacts presents no safety hazard		N/A
57.3b	- possibility of replacement by a cord which could make equipment hazards minimized		N/A
57.3b	- complies with CSA C22.2 NO. 21		N/A
57.3b	- not smaller than No. 18 AWG		N/A
57.3b	- minimum serviceability of Type SJ for mobile equipment or Type SV for other		N/A
57.9	Canadian difference to this clause no longer applicable		N/A
58.2	Canadian difference to this clause no longer applicable		N/A

IEC 60601			
SubClause	Difference + Test	Result - Remark	Verdict
59.1	Connecting cables comply with Canadian Electrical Code, Part I		N/A
60	Canadian difference to this clause no longer applicable		N/A

Denmark - Differences to IEC 60601-1:1988 + A1:1991 + A2:1995			
General	For plug and socket outlets the National Standard SB 107-2-D1 3rd Edition applies.		N/A
General	For Class I equipment: Plugs: DK 2-la, DK 2-la with flat phase pin or DK 2-5a. Socket outlets: DK 1-3a		N/A
General	For Class II equipment: Plugs: DKA 2-la, DKA 2-1b, Clb, C5, C6 or according to EN 50075		N/A

Israel - Differences to IEC 60601-1:1988 + A1:1991 + A2:1995			
4.7a	Equipment that is to be connected to the mains is intended for one of the permitted voltages and frequencies:		Pass
4.7a	a) Nominal frequency of 50 Hz		Pass
4.7a	b) Nominal voltage of 230 V, for portable and hand-held equipment		Pass
4.7a	c) Nominal voltage of 230 V, for one phase equipment with input power not exceeding 4 kVA		Pass
4.7a	d) Nominal voltage of 400 V, for multiphase equipment		N/A
4.7b	Other equipment is allowed to be connected to the mains if it has the following ratings:		Pass
4.7b	a) Single phase equipment, for the range of 220 to 240 V		Pass
4.7b	b) Multiphase equipment, for the range of 380 to 440 V		N/A

IEC 60601			
SubClause	Difference + Test	Result - Remark	Verdict

Korea - Differences to IEC 60601-1:1988 + A1:1991 + A2:1995			
6.1j	Insert the following sub-clause between the second and third sub-clauses: Equipment for one or several RATED voltage or frequency ranges, the RATED input for 220 V, 60 Hz or if applicable for 110 V, 60 Hz shall be separately marked.		Pass
6.1s	HIGH VOLTAGE TERMINAL DEVICES on the outside of EQUIPMENT which are accessible without the use of a TOOL shall be marked with the symbol "dangerous voltage" (see Appendix D, Table DII, Symbol 6) and wit the Korean language, .		N/A
6.2c	Replace the existing subclause wit the following: The presence of HIGH VOLTAGE PARTS shall be marked with the symbol "dangerous voltage" (see Appendix D, Table DII, Symbol 6) and in the Korean language.		N/A
6.8.1	Insert the following sub-clause after the last paragraph: Language of accompanying documents shall be included in Korean.		N/A
General	National supply voltages are 110 V, 220 V and 380 V.		Pass
General	Only appliances having supply frequency of 60 Hz or a frequency range including 60 Hz are accepted.		Pass
General	Instruction manuals and appliance markings related to safety, including nameplate, shall be in Korean or graphical symbols in accordance with IEC Publication 417.		N/A
General	Plugs for connection of the equipment to the supply mains shall comply with the Korean Standard (KSC 8305 and 8300). More details are available from KTL (c/o KTL) on request.		N/A

IEC 60601			
SubClause	Difference + Test	Result - Remark	Verdict

USA - Differences to IEC 60601-1:1988 + A1:1991 + A2:1995			
3.100.1a	Printed wiring boards comply with U.S. National or internationally harmonized component standards unless they are connected totally in a SELV circuit limited to 15 W, or less, maximum available power and whose failure will not result in a Safety Hazard.		Pass
3.100.1b	Lithium batteries comply with U.S. National or internationally harmonized component standards		N/A
3.100.1c	Optical isolators comply with U.S. National or internationally harmonized component standards unless they are connected totally in a SELV circuit limited to 15 W, or less, maximum available power and whose failure will not result in a Safety Hazard.		Pass
3.100.1d	Wiring and tubing comply with U.S. National or internationally harmonized component standards unless they are connected totally in a SELV circuit limited to 15 W, or less, maximum available power and whose failure will not result in a Safety Hazard.		Pass
3.100.1e	CRT's > 5 inches comply with U.S. National or internationally harmonized component standards		N/A
3.101.1	Primary circuit components up to isolation transformer meet U.S. national or international harmonized component standards		Pass
6	a) All words except the signal words in "CAUTION", WARNING", and "DANGER" markings at least 1.6 mm (1/16 inch) high		Pass
6	b) Signal words "CAUTION", WARNING", and "DANGER" at least 2.8 mm (7/64 inch)		N/A
6	c) Letters in contrast color to the background		Pass
6	Equipment capable of emitting ionizing radiation provided with warning statement		N/A
6	If equipment produced in more than one factory, factory identification marked on the equipment		Pass
6	Multiple-voltage equipment intended for permanent connection marked with voltage for which it is connected when shipped		N/A
6.2l	Statement for suitable wiring materials at temperatures over 60 ºC		N/A
6.6a	Identification of the content of gas cylinders in accordance with the color coding requirement of ANSI/NFPA99.		N/A
6.8	Cord-connected equipment provided with		N/A

IEC 60601			
SubClause	Difference + Test	Result - Remark	Verdict
	instructions to indicate type of attachment plug for alternate voltage		
10.2.2a	Rated voltage not exceeding 250 Vdc or single phase ac or 600 V polyphase ac for equipment up to 4kVA		Pass
10.2.2a	Rated voltage not exceeding 600 V for all other equipment		N/A
14	Fixed equipment and permanent equipment is Class I		N/A
18m	Earthing of X-ray equipment: All parts operating at over 600 V ac, 850 V dc, or 850 V peak are enclosed in protectively earthed enclosures		N/A
18m	Earthing of X-ray equipment: Connections from high-voltage equipment to other high voltage components made with high voltage shielded cables		N/A
18n	Accessible non-current carrying conductive parts are protectively earthed		N/A
19	Enclosure and earth leakage currents comply with U.S. limits		Pass
22	When risk of injury can occur, end stops are provided	No hazardous moving parts employed.	N/A
22	End stops have mechanical strength as determined by the test		N/A
22.4	Dangerous movements of equipment parts which may cause physical injury to the patient or operator are possible only by the continuous activation by the operator		N/A
22.7a	Emergency off switch has red actuator		N/A
22.7a	Emergency off switch: once actuated, maintains the equipment in "off" condition until action, different from that used to actuate, is performed		N/A
22.7a	Emergency off switch is readily accessible to operator		N/A
22.7b	Emergency off switch is marked with word "STOP" or symbol 5110 of IEC 878 in compliance with U.S. Clause 6		N/A
22.7b	Emergency off switch: separate and independent of the intended movement control		N/A
28.3	No evidence of damage to a safety catch after test		N/A

IEC 60601			
SubClause	Difference + Test	Result - Remark	Verdict
28.3	Safety catch marking provided		N/A
28.4	No damage to structural parts as a result of loading test		N/A
42	Insulation systems with measured temperatures exceeding Class A 105°C (based on 40°C ambient) comply with UL1446		Pass
55	Polymeric enclosures and external combustible surfaces		N/A
55	Polymeric enclosures comply with: Conductive coatings applied to nonmetallic surfaces comply with UL 746C		N/A
55	External combustible surface of more than 9.47 m2 or single dimension of 3.7 m have flame spread rating not exceeding 75 (Steiner Tunnel Test)		N/A
55	External combustible surface of more than 4.74 m2 but not exceeding 9.47 m2 have flame spread rating not exceeding 75 (Radiant Panel or Steiner Tunnel Test)		N/A
55	Polymeric enclosures for transportable equipment rated 94V-2 or better		N/A
55	Polymeric enclosures for fixed or stationary equipment rated 94V-0 or better		N/A
55	Polymeric enclosures withstand 6.78 Nm impact test		N/A
55	Polymeric enclosures: no deformation after mold stress test		N/A
55	Polymeric enclosures of hand-held equipment withstands 1.22 m drop test		N/A
56.3a	Connector, pin, plug attached to patient connected lead or contact cannot engage any part on the equipment, including separable cord set		N/A
56.3a	Connector, pin, plug attached to patient connected lead or contact cannot make contact with live parts of power receptacle outlet (if product can be used without professional supervision)		N/A
57	Permanently connected equipment provided with field wiring provision in accordance with NEC, ANSI/NFPA 70		N/A
57.2	Power cord mains plug is "Hospital Grade" type		N/A
57.2	Grounding reliability marking provided		N/A
57.2	Plug for radiography equipment acceptable for current not less than 50 % of maximum input		N/A

IEC 60601			
SubClause	Difference + Test	Result - Remark	Verdict
57.2	Plug acceptable for use with current not less than 125 % of rated current		N/A
57.2	Plug acceptable for voltage for which the equipment is configured when shipped		N/A
57.2	Polarized plug wired such that the center contact of edison-base lampholder, single-pole switch or single-pole overcurrent device connected in ungrounded side		N/A
57.3b	Detachable power supply cord unlikely to become detached accidentally		N/A
57.3b	Flexible cord is of type acceptable for application		N/A
57.3b	Flexible cord not smaller than 18 AWG		N/A
57.3b	Flexible cord complies with serviceability requirements		N/A
57.5b	If leads are provided for connection to branch circuit, the free end is in separate compartment		N/A
57.5b	If leads are provided for connection to branch circuit, the free length of leads inside field-wiring compartment is at least 152 mm long		N/A
58.2	Connections are mechanically secured in addition to soldering		Pass
59.1	Installation of connecting cords between parts of equipment in compliance with NEC		N/A
59.1	Cable type acceptable for external interconnection		N/A
400	Oxygen		N/A
400.1	At least one of the following three requirements is satisfied:		N/A
400.1.1	Electrical components separated by barrier per 400.2		N/A
400.1.2	Compartments with electrical components ventilated per 400.3		N/A
400.1.3	Electrical components comply with 400.4 so that cannot be a source of ignition		N/A
400.2	Barrier required by 400.1 is sealed at all joints and holes		N/A
400.3	Ventilation required by 400.1 is such that oxygen content does not exceed 4% above ambient		N/A
400.4	Under N.C. and S.F.C. the product of the value of no load rms voltage and short circuit rms current less than 10 VA		N/A

IEC 60601			
SubClause	Difference + Test	Result - Remark	Verdict
400.4	Surface temperature of components below 300°C in N.C. and S.F.C		N/A
400.5	External exhaust gas outlets located at least 20 cm from any electrical component mounted on the outside		N/A
400.6	Hospital beds intended for use with oxygen administering equipment provided with required markings		N/A
400.7	Pendant controls on hospital beds with oxygen administering equipment marked as required		N/A
400.8	Instructions for installation are in compliance with requirements of this clause		N/A
600.1	Separate power units packed with equipment		N/A
600.1	Separate power units provided with correlation marking		N/A
600.2.1	Direct plug-in unit construction and performance comply with required sections of UL1310		N/A
600.2.2	Direct plug-in unit external temperature rise during overheating test do not exceed 65°C		N/A
600.2.3	If direct plug-in unit provided with a mounting tab - unit marked as required by UL1310		N/A